kamstrup

Technical description

MULTICAL® 603

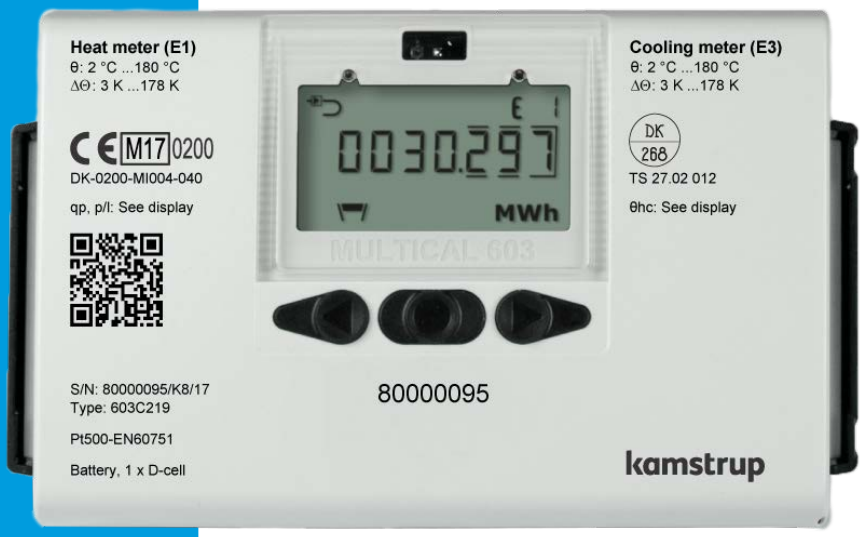

Kamstrup A/S · Industrivej 28, Stilling · DK-8660 Skanderborg · T: +45 89 93 10 00 · info@kamstrup.com · kamstrup.com

List of words and symbols

Word/symbol	Meaning	Unit	Expired designations
qi	Minimum approved flow	[l/h]	Q_i, q_{vmin}, Q_{min}, q_{min}
qp	Permanent/approved nominal flow	[m³/h]	Q_s, q_{vmax}, Q_n, q_n, q_{max}
qs	Maximum approved flow [1]	[m³/h]	Q_{max}
Θ	Temperature range of calculator	[°C]	
θ_q	Temperature range of flow sensor (medium)	[°C]	
θ_{hc}	Limit value for shift between heat and cooling [2]	[°C]	
ΔΘ	Temperature difference of inlet and outlet	[K]	
Δflow	Difference in actual flow between V1 and V2	[m³/h]	
ΔMass	Difference in mass between M1 and M2	[kg]	
t_{BAT}	Battery temperature	[°C]	
DN	Nominal diameter	[mm]	
PN	Nominal pressure	[bar]	
E_c	Max permissible error of calculator	[%]	
E_f	Max permissible error of flow sensor	[%]	
E_t	Max permissible error of temperature sensors	[%]	
MPE	Maximum permissible error	[%]	
PQ	Power and flow in connection with tariff		
GF	Glass fibre reinforcement		
KMP	Kamstrup Meter Protocol		
CP	Coefficient of Performance (COP)		

[1] Less than an hour/day and less than 200 hours/year
[2] Only available in meter type 6

Contents

1 General description 7
1.1 Mechanical construction 8
1.2 Electronic structure 9
2 Technical data 10
2.1 Approved meter data 10
2.2 Accuracy 11
2.3 Accuracy of a complete meter 11
2.4 Electrical data 12
2.5 Mechanical data 16
2.6 Materials 16
3 Type overview 17
3.1 Type number 18
3.1.1 Accessories 20
3.2 Configuration number 22
3.2.1 Flow sensor position >A< 23
3.2.2 Measuring unit >B< 23
3.2.3 Flow sensor coding >CCC< 24
3.2.4 Display code >DDD< 29
3.2.5 Tariffs >EE< 33
3.2.6 Pulse inputs A and B >FF-GG< 39
3.2.7 Integration mode >L< 44
3.2.8 Leakage limits (V1, V2) >M< 47
3.2.9 Cold water leakage (In-A, In-B) >N< 48
3.2.10 Pulse outputs C and D >PP< 48
3.2.11 Data logger profile >RR< 51
3.2.12 Encryption level >T< 54
3.2.13 Customer label >VVVV< 54
3.3 Data 55
3.3.1 Serial number and extended availability 57
4 Installation 59
4.1 Installation requirements 59
4.2 Mounting of MULTICAL® 603 calculator 60
4.2.1 Compact mounting 60
4.2.2 Wall mounting 60
4.2.3 Position of calculator 60
4.3 Mounting in inlet or outlet 61

4.4 EMC conditions ... 61
4.5 Climatic conditions ... 62
4.6 Sealing ... 62
5 Dimensional sketches ... 63
6 Display ... 65
6.1 USER loop ... 69
6.2 TECH loop ... 69
6.2.1 Module readings ... 75
6.3 SETUP loop ... 76
6.3.1 Change of parameters in the SETUP loop ... 77
6.4 TEST loop ... 85
7 Calculator functions ... 87
7.1 Application types and energy calculations ... 87
7.1.1 Approvals for energy and applications ... 88
7.1.2 Components used in applications ... 88
7.1.3 Application drawings ... 89
7.1.4 Energy calculations and registers E1 and E3 ... 95
7.1.5 Energy calculations and registers E8, E9, E10 and E11 ... 98
7.1.6 Outlet energy registers A1 and A2 ... 99
7.2 Measurement of a heat pump's coefficient of performance ... 100
7.2.1 Coefficient of Performance (CP) ... 100
7.2.2 Seasonal Coefficient of Performance (SCOP) ... 101
7.2.3 Measurement of the coefficient of performance (CP) of a gas boiler ... 101
7.3 Offset adjustment of temperature sensor measurement ... 102
7.4 Combined heat/cooling metering ... 103
7.5 Min/max calculations of power (P) and flow (Q) ... 104
7.6 Temperature measurement ... 106
7.7 Information code types ... 107
7.7.1 Information code types in display ... 108
7.7.2 Information code types on serial communication ... 111
7.8 Transport state ... 112
7.9 Info logger ... 113
7.10 Config data logger ... 113
7.11 Summer/winter time adjustment ... 114
7.12 Preset and Scheduler functions for temperature inputs ... 115
7.13 Differential energy and volume calculation ... 115

8 Flow sensor connection 117
8.1 ULTRAFLOW® (Connection type 1-2-7-8) 117
8.1.1 Auto Detect of ULTRAFLOW® X4 117
8.1.2 The need for longer cables between MULTICAL® 603 and ULTRAFLOW® 120
8.2 Flow sensor with reed or relay switch output (Connection type L) 121
8.3 Flow sensor with transistor output (Connection type 7-8-C-J) 121
8.4 Flow sensors with active 24 V pulse output (Connection type P) 121
8.4.1 Connection examples 122
9 Temperature sensors 123
9.1 Cable influence and connection of cables 123
9.2 Sensor types 125
9.3 Short direct EN1434 temperature sensor 126
9.4 ø5.8 mm pocket sensor with connection head 127
9.5 ø5.8 mm pocket sensor 128
9.6 ø6.0 mm pocket sensor with connection head 129
9.7 Resistance tables 130
10 Power supply 131
10.1 Lithium battery, 2 x A-cells 131
10.2 Lithium battery, 1 x D-cell 132
10.3 Battery lifetimes 133
10.4 230 VAC supply module 135
10.5 24 VAC supply module 135
10.6 230 VAC high-power SMPS 136
10.7 24 VDC/VAC high-power SMPS 136
10.8 Power consumption of mains connected meter 137
10.9 Transformer 230/24 VAC 137
10.10 Supply cables for supply module 137
10.11 Retrofitting and exchange of supply modules 138
10.12 Data backup in case of interruption of supply 139
10.13 Danish regulations for mains connection of meters 139
11 Communication 140
11.1 Integrated M-Bus 140
11.2 Communication modules 141
11.3 Marking of communication modules 142
11.4 Modules 142

11.4.1 Data + pulse inputs (type no.: HC-003-10) ... 142
11.4.2 Data + pulse outputs (type no. HC-003-11) ... 143
11.4.3 M-Bus + pulse inputs (type no. HC-003-20) ... 143
11.4.4 M-Bus + pulse outputs (type no.: HC-003-21) ... 144
11.4.5 M-Bus + Thermal Disconnect (type no. HC-003-22) ... 144
11.4.6 Wireless M-Bus + pulse inputs (type no. HC-003-30) ... 145
11.4.7 Wireless M-Bus + pulse outputs (type no.: HC-003-31) ... 145
11.4.8 Analog output module (type no.: HC-003-40) ... 146
11.4.9 Analog input module (type no.: HC-003-41) ... 146
11.4.11 LON FT-X3 + 2 pulse inputs (type no. HC-003-60) ... 148
11.4.12 BACnet MS/TP + 2 pulse inputs (type no. HC-003-66) ... 148
11.4.13 Modbus RTU + 2 pulse inputs (type no. HC-003-67) ... 148
11.5 Mounting of antenna ... 149
11.6 Retrofitting modules ... 149
11.7 Supply of modules ... 151
12 Data communication ... 152
12.1 MULTICAL® 603 data protocol ... 152
12.2 Optical readout head ... 152
12.3 Data protocol ... 152
13 Test and calibration ... 153
14 METERTOOL HCW ... 157
14.1 Introduction ... 157
14.2 System requirements ... 157
14.3 Interface ... 157
14.4 Installation ... 158
14.5 Settings ... 159
14.6 How to use METERTOOL HCW ... 160
14.7 Auto-integration ... 161
15 Approvals ... 162
15.1 Type approvals ... 162
15.2 The Measuring Instruments Directive ... 162
16 Troubleshooting ... 163
17 Disposal ... 164
18 Documents ... 165

1 General description

MULTICAL® 603 is an all-round calculator, suitable as heat meter, cooling meter or combined heat/cooling meter together with 1 or 2 flow sensors and 2 or 3 temperature sensors. The meter is intended for energy measurement in almost all types of thermal installations where water is used as the energy-conveying medium.

MULTICAL® 603 can, in addition to heat and cooling measurement, be used for leakage monitoring, permanent performance monitoring, as power and flow limiter with valve control as well as for energy measurement in both open and closed systems.

According to EN 1434 and MID, MULTICAL® 603 can be designated as a “calculator” with separate type approval and verification, and it can be delivered either as a separate calculator or as a complete meter, with mounted temperature sensors and flow sensors according to customer requirements.

The MULTICAL® 603 calculator top can be separated from the connection base without using tools when the installation seals are broken. This provides free access to the installation of the flow sensor, temperature sensors, power supply/battery and communication modules.

The calculator top is factory-sealed and may only be opened by authorised meter laboratories. If the factory seal is broken, the factory guarantee no longer applies.

MULTICAL® 603 has 2 flow sensor inputs that can be used for both electronic and mechanical flow sensors. The pulse figure cab be programmed from 0.001 to 300 pulses/liter, and the calculator can be programmed to all nominal flow sensor sizes from 0.6 to 15,000 m^3/h. The calculator can be delivered with both galvanically connected and separated flow sensor inputs.

The temperature measurements in inlet and outlet are performed with accurately paired Pt500 or Pt100 sensor according to EN 60 751 and EN 1434. MULTICAL® 603 normally comes with a Pt500 sensor pair, e.g. short direct sensors according to EN 1434-2 or ø5.8 mm pocket sensors, which fit Kamstrup sensor pockets in stainless steel. MULTICAL® 603 can also be delivered with 4-wire temperature sensor inputs that are especially suitable for installations with long temperature sensor cables.

Accumulated heat energy and/or cooling energy can be displayed in kWh, MWh, GJ or Gcal, all with seven or eight significant digits plus measuring unit. The display has been specially designed with a view to obtaining long lifetime and sharp contrast in a wide temperature range. Furthermore, MULTICAL® 603 can be delivered in a variant with backlit display (type 603-F).

Other reading options are: accumulated water consumption, operating hour counter, error hour counter, current temperature measurements, current flow and power readings. Furthermore, MULTICAL® 603 can be configured to display monthly and yearly loggings, target date data, max/min. flow, max/min. power, information code, current date as well as user-defined tariffing.

MULTICAL® 603 is powered by an internal D-cell lithium battery with a lifespan up to 16 years or a 2xA lithium packet with a lifespan of up to 9 years. Alternatively, the meter can be mains supplied, either by 24 VAC or 230 VAC.

In addition to the energy meter’s own data, MULTICAL® 603 can display the accumulated consumptions of two extra water meters, e.g. cold and hot water meters, which supply a pulse signal to MULTICAL® 603 via reed-switch or electronic output. The contact signals from the extra water meters are connected via the communication modules.

A multiple plug placed behind the seal is used in connection with calibration and adjustment during verification as well as in connection with communication modules. MULTICAL® 603 is available with 1 or 2 communication modules for Wireless M-Bus, M-Bus and RS232. The modules are available with either pulse inputs or pulse outputs. Furthermore, the meter can be delivered with integrated M-Bus, independent of the modules.

In designing MULTICAL® 603, great importance has been attached to flexibility through programmable functions and plug-in modules (see paragraphs 3.2 and 11) in order to secure optimum use in a wide range of applications. In addition, the construction makes it possible to update previously installed MULTICAL® 603 via the PC-program METERTOOL HCW.

This technical description has been written with a view to enabling operations managers, meter installers, consulting engineers and distributors to utilize all functions comprised in MULTICAL® 603. Furthermore, the description is targeted at laboratories performing tests and verification.

The technical description is currently updated. Find the latest edition at http://products.kamstrup.com/index.php.

1.1 Mechanical construction

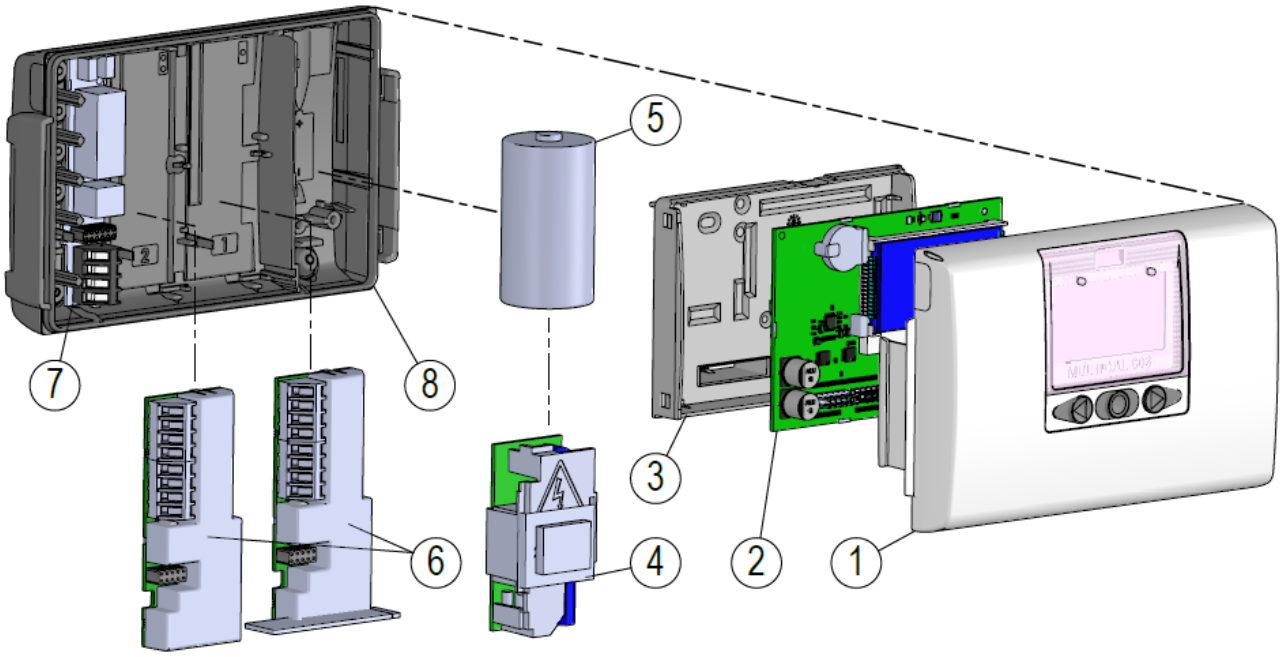

Figure 1

1	Top cover with front keys and laser engraving
2	PCB with microcontroller, display, etc.
3	Verification cover (may only be opened by an authorised laboratory)
4	Either a power supply module can be mounted…

5	… or a battery can be mounted
6	1 or 2 communication modules
7	Connection of temperature sensors and flow sensor
8	Bottom cover

1.2 Electronic structure

The electronic construction of MULTICAL® 603 is shown in the below block diagram. 1 or 2 of the described modules, which include pulse inputs or pulse outputs in addition to data communication, can be mounted in the module bays of MULTICAL® 603. During operation MULTICAL® 603 only includes one of the six supply module types.

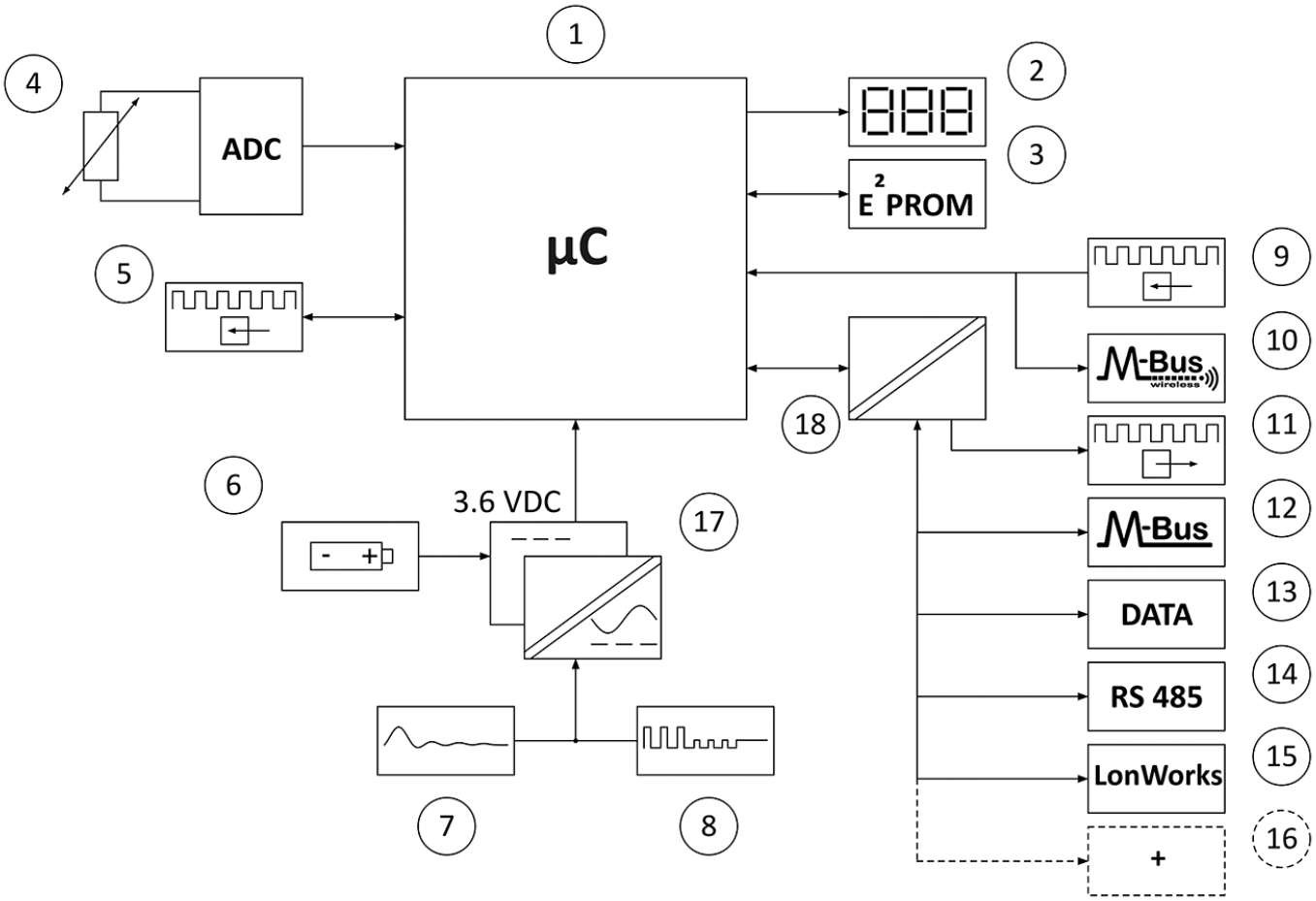

1	Microcontroller
2	Display, eight-digit seven-segment + symbols
3	Non-volatile memory, E²PROM
4	Temperature sensors, Pt100 or Pt500, 2- or 4-wire
5	Pulse input(s) for flow sensor(s)
6	Battery, 2 x A-cells or 1 x D-cell
7	Linear power supply, 24 VAC or 230 VAC.
8	High-power SMPS, 24 VAC/VDC or 230 VAC
9	Pulse inputs

10	Wireless M-Bus
11	Pulse outputs
12	M-Bus
13	Data communication
14	RS485, Modbus and BACnet
15	LonWorks
16	… and even more communication possibilities
17	Galvanic separation, power supplies
18	Galvanic separation, communication modules

Note: The arrows in the figure indicate the signal direction.

2 Technical data

2.1 Approved meter data

Approvals	**DK-0200-MI004-040, heat meter** according to MID 2014/32 EU and EN 1434:2015 **TS 27.02 012, cooling meter and cooling/heat meter** According to DK-BEK 1178 and EN 1434:2015
EU directives	Measuring Instruments Directive, Low Voltage Directive, Electromagnetic Compatibility Directive, Pressurized Equipment Directive, Radio Equipment Directive

Heat meter approval	DK-0200-MI004-040
Temperature range	θ: 2 °C…180 °C
Differential range	$\Delta\Theta$: 3 K…178 K
Cooling meter and cooling/heat meter	TS 27.02 012
Temperature range	θ: 2 °C…180 °C
Differential range	$\Delta\Theta$: 3 K…178 K
Media temperature, ULTRAFLOW®	θ_q: 2 °C…130 °C

The stated minimum temperatures are related to the type approval.
The meter has no cut-off for low temperature and thus measures down to 0.01 °C and 0.01 K.

Accuracy		
- Calculator	$E_c = \pm (0.5 + \Delta\Theta_{min}/\Delta\Theta)$ %	
- Flow sensor, ULTRAFLOW®	$E_f = \pm (2 + 0.02\ qp/q)$, but not exceeding ±5 %	
Temperature sensor connection	Type 603-A	Pt100 – EN 60 751, 2-wire connection
	Type 603-B	Pt100 – EN 60 751, 4-wire connection
	Type 603-C/E/F	Pt500 – EN 60 751, 2-wire connection
	Type 603-D/G/H	Pt500 – EN 60 751, 4-wire connection
EN 1434 designation	Environmental class A and C	
MID designation	Mechanical environment: Class M1 and M2	
	Electromagnetic environment: Class E1 and E2	
	Non-condensing environment, closed location (indoors), 5…55°C	

2.2 Accuracy

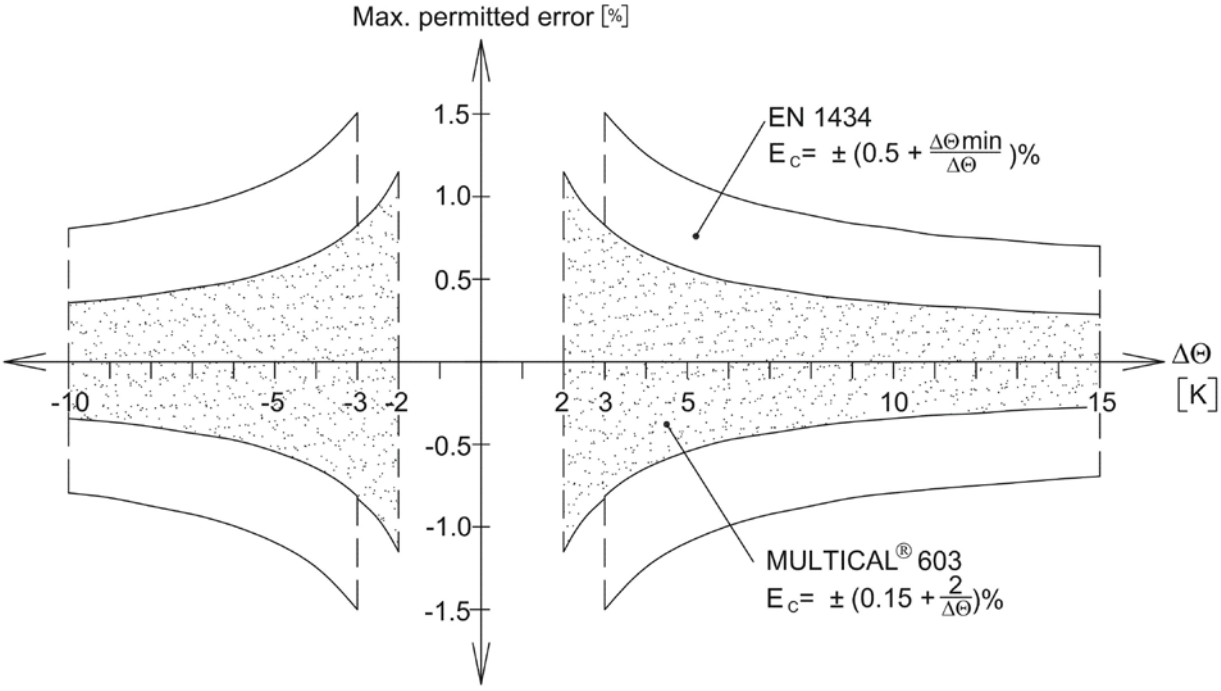

Figure 2: Typical accuracy of MULTICAL® 603 compared to EN 1434.

2.3 Accuracy of a complete meter

Heat meter components	MPE according to EN 1434-1	Typical accuracy
ULTRAFLOW®	$E_f = \pm (2 + 0.02\ qp/q)$, but not exceeding ±5 %	$E_f = \pm (1 + 0.01\ qp/q)$ %
MULTICAL® 603	$E_c = \pm (0.5 + \Delta\Theta_{min}/\Delta\Theta)$ %	$E_c = \pm (0.15 + 2/\Delta\Theta)$ %
Sensor pair	$E_t = \pm (0.5 + 3\ \Delta\Theta_{min}/\Delta\Theta)$ %	$E_t = \pm (0.4 + 4/\Delta\Theta)$ %

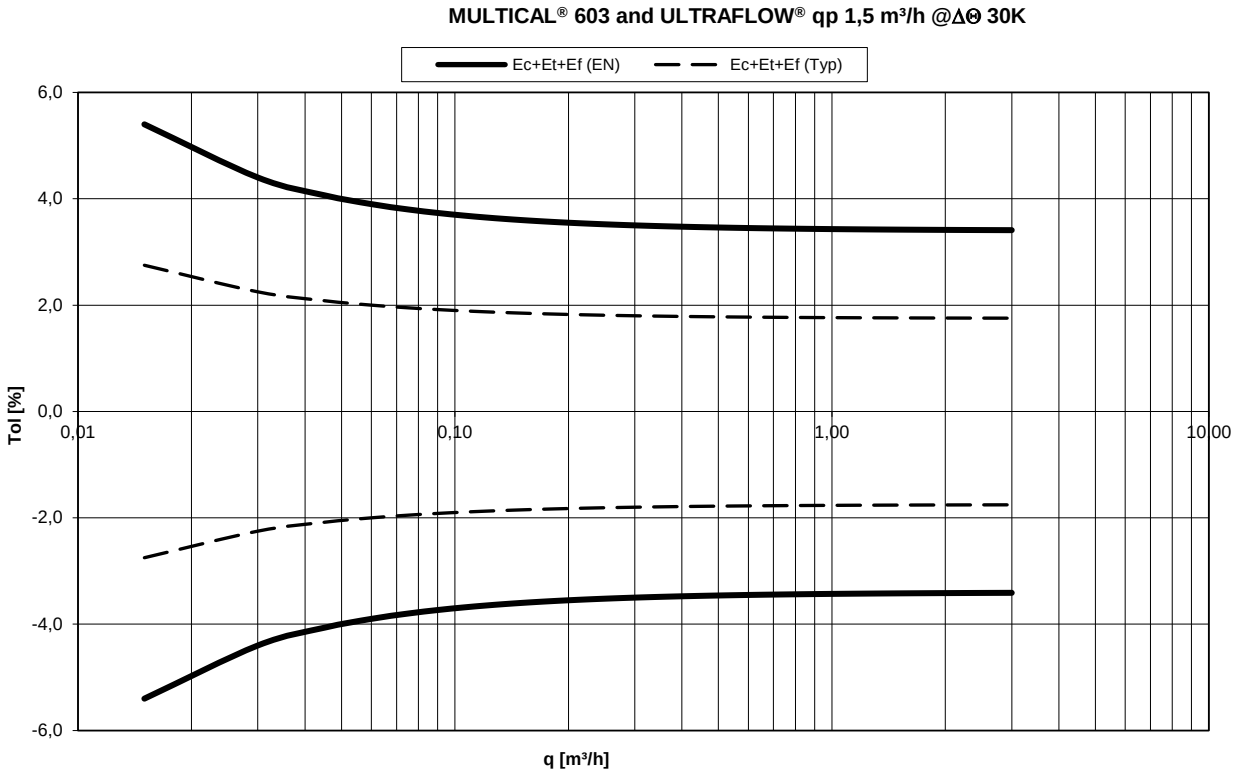

Diagram 1: Total typical accuracy of MULTICAL® 603 and ULTRAFLOW® compared to EN 1434-1

2.4 Electrical data

Calculator data

Typical accuracy	Calculator: $E_c \pm (0.15 + 2/\Delta\Theta)$ %	Sensor pair: $E_t \pm (0.4 + 4/\Delta\Theta)$ %
Display	LCD – 7 or 8 digits, digit height 8.2 mm	
Resolutions	999.9999 - 9999.999 – 99999.99 – 999999.9 – 9999999 9999.9999 - 99999.999 – 999999.99 – 9999999.9 – 99999999	
Energy units	MWh – kWh – GJ – Gcal	
Data logger (EEPROM), programmable	Logging intervals: From one minute to one year Logger content: All registers can be selected Standard logger profile: 20 years, 36 months, 460 days, 1400 hours	
Info logger (EEPROM)	250 info codes can be read via LogView, the last 50 info codes are shown in the meter's display	
Clock/calendar (with backup battery)	Clock, calendar, leap year compensation, target date	
Daylight saving time/wintertime (DST)	Programmable under country code This function can be disabled so that "technical normal time" is used	
Time accuracy	Without external adjustment: With external adjustment every 48 hours:	Less than 15 min./year Less than 7 s from legal time
Data communication	KMP protocol with CRC16 used for optical communication as well as for modules.	
Power of temperature sensors	< 10 μW RMS	

Supply voltage	3.6 VDC ± 0.1 VDC	
Battery	3.65 VDC, D-cell lithium	3,65 VDC, 2xA cell lithium
Replacement interval		
- Wall mounted	16 years @ $t_{BAT} < 30$ °C	9 years @ $t_{BAT} < 30$ °C
- Mounted on flow sensor	14 years @ $t_{BAT} < 40$ °C	7 years @ $t_{BAT} < 40$ °C
	See paragraph 10.3 for further information.	
Backup battery (for real-time clock)	3.0 VDC, BR-cell lithium	
Mains supply	230 VAC +15/-30 %, 50/60 Hz 24 VAC ±50 %, 50/60 Hz	
Insulation voltage	3.75 kV	
Power consumption	< 1 W	
Backup supply	Integral super cap eliminates interruptions due to short-term power failures (only supply modules type 603-xxxxxxx7 and -8)	
EMC data	Fulfils EN 1434 class A and C (MID class E1 and E2)	

Temperature measurement		t1 Inlet	t2 Outlet	t3 Control	t4 Extra	ΔΘ (t1-t2) Heat measurement	ΔΘ (t2-t1) Cooling measurement	t5 Pre-setting for A1 and A2
603-A 2-Wire Pt500 603-B 4-Wire Pt500 603-C/E/F 2-Wire Pt500 603-D/G/H 4-Wire Pt500	Measuring range	0.00…185.00 °C (t1 and t2: Approved for 2.00…180.00 °C)						

Offset adjustment

± 0.99 K joint zero point adjustment for t1, t2 and t3
See paragraph 7.3

Note: The offset adjustment is only active on measured temperatures. If, for example, t3 has been selected for a preset value, the offset adjustment will not influence the preset value.

Max cable lengths		Pt100, 2-wire	Pt500, 2-wire
	Max ø6 mm cable	2 x 0.25 mm^2: 2.5 m 2 x 0.50 mm^2: 5 m 2 x 1.00 mm^2: 10 m	2 x 0.25 mm^2: 10 m
		Pt100, 4-wire	**Pt500, 4-wire**
		4 x 0.25 mm^2: 100 m	4 x 0.25 mm^2: 100 m

Flow measurement	ULTRAFLOW®	Reed switches	FET switches	24 V active pulses
V1 and V2	V1: 9-10-11 and V2: 9-69-11	V1: 10-11 and V2: 69-11	V1: 10-11 and V2: 69-11	V1: 10B-11B and V2: 69B-79B
CCC-code	1xx-2xx-4xx-5xx-8xx	0xx	9xx	2xx and 9xx
EN 1434 pulse class	IC	IB	IB	(IA)
Pulse input	680 kΩ pull-up to 3.6 V	680 kΩ pull-up to 3.6 V	680 kΩ pull-up to 3.6 V	12 mA at 24 V
Pulse ON	< 0.4 V for > 1 ms	< 0.4 V for > 300 ms	< 0.4 V for > 30 ms	< 4 V for > 3 ms
Pulse OFF	> 2.5 V for > 4 ms	> 2.5 V for > 100 ms	> 2.5 V for > 70 ms	> 12 V for > 4 ms
Pulse frequency	< 128 Hz	< 1 Hz	< 8 Hz	< 128 Hz
Integration frequency	< 1 Hz	< 1 Hz	< 1 Hz	< 1 Hz
Electrical isolation	No	No	No	2 kV
Max cable length	10 m	10 m	10 m	100 m
Max cable length with Cable Extender Box, Type 66-99-036	30 m	30 m	30 m	-

Pulse inputs A and B In-A 65-66 and In-B: 67-68 via module	Electronic switch	Reed switch
Pulse input	680 kΩ pull-up to 3.6 V	680 kΩ pull-up to 3.6 V
Pulse ON	< 0.4 V for > 30 ms	< 0.4 V for > 500 ms
Pulse OFF	> 2.5 V for > 30 ms	> 2.5 V for > 500 ms
Pulse frequency	< 3 Hz	< 1 Hz
Electrical isolation	No	No
Max cable length	25 m	25 m
Requirements to external	Leakage current at function open < 1 μA	
Update of display	Follows the selected integration interval (from 2 to 64 s)	

Pulse outputs C and D Out-C: 16-17 and Out-D: 18-19 via module			Pulse duration:
Pulse value *When pulse outputs are used for e.g. remote counting of energy and volume with the same resolution as the display [1]*	Heat meter:	Out-C = CE+ Out-D = CV	Selectable: 10 ms, 32 ms or 100 ms
	Cooling meter:	Out-C = CE- Out-D = CV	
	Heat/cooling meter:	Out-C = CE+ Out-D = CE-	
Pulse value *When pulse outputs are used as pulse transmitter/divider for e.g. regulation purposes*	Transmitter:	Out-C = V1 Out-D = V2	4 ms
	Divider:	Out-C = V1/4	22 ms

Communication module	HC-003-11 (Before 2017-05)	HC-003-11 (After 2017-05)
	HC-003-21 & -31 (Before 2018-04)	HC-003-21 & -31 (After 2018-04)
Pulse output type	Open collector (OB)	Opto FET
External voltage	5…30 VDC	5…48 VDC/AC
Current	1…10 mA	1…50 mA
Residual stress	U_{CE} ≈ 1 V at 10 mA	R_{ON} ≤ 40 Ω
Electrical isolation	2 kV	2 kV
Max cable length	25 m	25 m

[1] At high resolution, the pulse outputs will be reduced by 1:10 when selecting 32 ms and 100 ms. See paragraph 3.2.10 about PP codes.

2.5 Mechanical data

Environmental class	Fulfils EN 1434 class A and C (MID class E1 and E2)	
Ambient temperature	5…55°C, non-condensing, closed location (installation indoors)	
Protection class	Calculator: IP 65	According to EN/IEC 60529

Medium temperatures

ULTRAFLOW®	2…130 °C	At media temperatures below the ambience temperature or above 90 °C in the flow sensor, we recommend that the calculator is wall-mounted.
Medium in ULTRAFLOW®	Water (district heating water as described in CEN TR 16911 and AGFW FW510)	
Storage temperature	-25…60 °C (drained flow sensor)	
Connecting cable	ø3.5…6 mm	
Supply cable	ø5…8 mm	

2.6 Materials

Calculator case	Top and base	Thermoplastic, PC 10 % GF with TPE (thermoplastic elastomer)
	Verification cover	ABS
Cables	Silicone cable with inner Teflon insulation	

3 Type overview

MULTICAL® 603 can be ordered in countless combinations as required by the customer. First select the required hardware from the type overview, and next select the required software configuration via the configuration number (config number). Further, certain data is configured under the country code, which includes e.g. the definition of GMT, the primary M-Bus address as well as the yearly and monthly target date. Through these selections and configurations MULTICAL® 603 can be adjusted for its current task.

The meter has been configured from the factory and is ready for use. It can, however, be changed/reconfigured after installation Reconfiguration can be carried out from the meter's SETUP loop or by means of either METERTOOL HCW or READy. Read more about METERTOOL HCW in paragraph 14 and about the SETUP loop in paragraph 6.3.

Type number:
>603-xxxx-xxxxxxxx<

The first 4 digits of the type number (603-**xxxx**-xxxxxxxx) are written on the meter's front and cannot be changed after production. The last 8 digits of the type number (603-xxxx-**xxxxxxxx**) are not written on the meter, but can be read from the display.

Config. number:
>A-B-CCC-DDD-EE-FF-GG-L-M-N-PP-RR-T-VVVV<

The config number is not written on the meter, but can be displayed distributed on four readings in TECH loop.

Config 1: >A-B-CCC-DDD<

Flow sensor position-Measuring unit-Resolution-Display code

Config 2: >EE-FF-GG-L-M<

Tariff-Pulse inputs-Integration mode-Leakage

Config 3: >N-PP-RR-T<

Cold water leakage-Pulse outputs-Data logger profile-Encryption level

Config 4: >VVVV<

Customer label

Serial number:
>xxxxxxxx/WW/yy<

Consisting of:

8-digit serial number (**xxxxxxxx**)
2-digit device code for extended availability **(WW)**
2-digits for production year **(yy)**

The unique serial number is written on the meter and cannot be changed after factory programming.

Data:
During production MULTICAL® 603 is programmed with a number of measuring values. See section 3.3 for more details about these measuring values.

3.1 Type number

MULTICAL® 603 type number					*Static data*		*Dynamic data*
					603-xxxx	-	xxxxxxxx
					Written on the meter's front		Can be displayed
				Type 603 -	□ - □ - □□	- □ -	□□ - □ - □□ - □□
Calculator type							
Pt100 2-wire	t1-t2	V1	M-Bus	A			
Pt100 4-wire	t1-t2	V1	M-Bus	B			
Pt500 2-wire	t1-t2	V1	M-Bus	C			
Pt500 4-wire	t1-t2	V1	M-Bus	D			
Pt500 2-wire	t1-t2-t3	V1-V2		E			
Pt500 2-wire	t1-t2-t3	V1-V2	Backlit display	F			
Pt500 4-wire	t1-t2	V1 (24 V active pulses)	M-Bus	G			
Pt500 4-wire	t1-t2	V1-V2		H			
Meter type							
Heat meter		MID module B		1			
Heat meter		MID module B+D		2			
Heat/cooling meter		MID module B+D & TS 27.02	Θ_{HC} = OFF	3			
Heat meter		National approval		4			
Cooling meter		TS 27.02+BEK1178		5			
Heat/cooling meter		MID module B+D & TS 27.02	Θ_{HC} = ON	6			
Volume meter				7			
Energy meter				9			
Country code							
See paragraph 3.3					XX		
Flow sensor connection type							
Delivered with one ULTRAFLOW®						1	
Delivered with two identical ULTRAFLOW®						2	
Prepared for one ULTRAFLOW®						7	
Prepared for two identical ULTRAFLOW®						8	
Prepared for flow sensor with fast and bounce-free electronic pulses						C	
Prepared for flow sensor with slow and bounce-free electronic pulses						J	
Prepared for flow sensor with slow pulses with bounce						L	
Prepared for flow sensor with 24 V active pulses						P	
Temperature sensor set							
No temperature sensors							00
Pt500 temperature sensor pair							
Short direct sensor pair		27.5 mm	1.5 m				11
Short direct sensor pair		27.5 mm	3.0 m				12
Short direct sensor pair (3 pairs)		27.5 mm	1.5 m				15
Short direct sensor pair (3 pairs)		27.5 mm	3.0 m				16
Short direct sensor pair		38.0 mm	1.5 m				21
Short direct sensor pair		38.0 mm	3.0 m				22
Pocket sensor pair		ø5.8 mm	1.5 m				31

Type 603 -			□□	-	□	-	□□	-	□□
Pocket sensor pair	ø5.8 mm	3.0 m	32						
Pocket sensor pair	ø5.8 mm	5.0 m	33						
Pocket sensor pair	ø5.8 mm	10.0 m	34						
Pocket sensor pair (3 pairs)	ø5.8 mm	1.5 m	35						
Pocket sensor pair (3 pairs)	ø5.8 mm	3.0 m	36						
Pocket sensor pair (3 pairs)	ø5.8 mm	5.0 m	37						
Pocket sensor pair (3 pairs)	ø5.8 mm	10.0 m	38						
Pt100 temperature sensor pair									
Short direct sensor pair	27.5 mm	2.0 m	J1						
Short direct sensor pair	38.0 mm	2.0 m	J2						
Supply									
No supply					0				
Battery, 1 x D-cell					2				
230 VAC high-power SMPS					3				
24 VAC/VDC high-power SMPS					4				
230 VAC power supply					7				
24 VAC power supply					8				
Battery, 2 x A-cells					9				
Communication module (2 module slots)									
No module							00		00
Data + 2 pulse inputs (In-A, In-B)							10		10
Data + 2 pulse outputs (Out-C, Out-D) + pulse transmitter (V1+V2)							11		11
M-Bus, configurable + 2 pulse inputs (In-A, In-B)							20		20
M-Bus, configurable + 2 pulse outputs (Out-C, Out-D)							21		21
M-Bus, configurable w/ Thermal Disconnect							22		22
Wireless M-Bus, EU, configurable, 868 MHz + 2 pulse inputs (In-A, In-B)							30		30
Wireless M-Bus, EU, configurable, 868 MHz + 2 pulse outputs (Out-C, Out-D)							31		31
Analog output module 2 x 0/4…20 mA							40		40
Analog input module 2 x 0/4…20 mA							41		41
PQT Controller							43		43
Kamstrup Radio + 2 pulse inputs (In-A, In-B)							50		50
LON FT-X3 + 2 pulse inputs (In-A, In-B)							60		60
BACnet MS/TP (RS-485) + 2 pulse inputs (In-A, In-B)							66		66
Modbus RTU (RS-485) + 2 pulse inputs (In-A, In-B)							67		67
High Power Radio Router + 2 pulse inputs (In-A, In-B)							84		84

3.1.1 Accessories

Supply modules (Supplyxx3)

Article number	Description
HC-993-02	Battery module with one D-cell
HC-993-03	230 VAC high-power supply module
HC-993-04	24 VAC/VDC high-power supply module
HC-993-07	230 VAC supply module
HC-993-08	24 VAC supply module
HC-993-09	Battery module with 2 A-cells

Various accessories (Accessoriexx3)

Article number	Description
2006-681	Supply module label
3026-207.A	Wall bracket including mounting kit
3026-517	Sealing cap for sensor, blue, 2 pcs.
3026-518	Sealing cap for sensor, red, 2 pcs.
3026-858	Perpendicular bracket ULTRAFLOW® (qp 0,6…2,5)
3026-909	Holder for optical reading head
3026-963	Separation tool base
3130-262	Blind plug with o-ring
3130-269	Cable relief set
5000-337	Module cable 2 m (2x0.25 m²)
6699-035	USB cable for module configuration
6699-036	Cable Extender Box
6699-042	Metal plate for optical reader 20 pcs.
6699-099	Infrared optical reading head w/USB plug
6699-102	Optical reading head w/9F D-SUB plug
6699-110	Panel mounting kit
6699-447.E	Internal antenna for Kamstrup radio, 434 MHz
6699-482.E	Internal antenna for wM-Bus, 868 MHz
6699-903	Pulse Transmitter Box

Calibration units

Article number	Description
6699-363	MULTICAL® 603, 2-wire Pt500, Heat/Cooling (used with METERTOOL HCW)
6699-364	MULTICAL® 603, 4-wire Pt500, Heat/Cooling (used with METERTOOL HCW)
6699-365	MULTICAL® 603, 2/4-wire Pt100, Heat/Cooling (used with METERTOOL HCW)

Software

Article number	Description
6699-724	METERTOOL HCW
6699-725	LogView HCW

Couplings

Article number	Description
6561-323	Coupling incl. gasket, DN15, G¾B - R½, 2 pcs
6561-324	Coupling incl. gasket, DN20, G1B - R¾, 2 pcs
6561-349	Coupling incl. gasket, DN25, G1¼B - R1, 2 pcs
6561-350	Coupling incl. gasket, DN32, G1½B - R1¼, 2 pcs
6561-351	Coupling incl. gasket, DN40, G2B - R1½, 2 pcs

Extensions

Article number	Description
1330-010	Extensions excl. gaskets, 110 - 165 mm/165 - 220 mm, G¾B - G1B, 1 item. *
1330-011	Extensions excl. gaskets, 190 - 220 mm, G1B - G1B, 1 pc.
1330-012	Extensions excl. gaskets, 110 - 220 mm, G¾B - G1B, 1 pc. *
1330-013	Extensions excl. gaskets, 110 - 130 mm, G¾B - G1B, 1 pc. *
1330-015	Extensions excl. gaskets, 110 - 130 mm, G¾B - G¾B, 1 pc.
1330-019	Extensions excl. gaskets, 110 - 165 mm, G¾B - G¾B, 1 pc.

** 2 pcs to be ordered per meter*

Sensor nipples and pockets

Article number	Description
6561-330	11 mm adapter for 38 mm short direct sensor
6556-491	R½ nipple for Pt500 short direct sensor
6556-492	R¾ nipple for Pt500 short direct sensor
6557-324	R½ x 65 mm sensor pocket, ø5.8 mm
6557-327	R½ x 90 mm sensor pocket, ø5.8 mm
6557-314	R½ x 140 mm sensor pocket, ø5.8 mm

Ball valves

Article number	Description
6556-474	½” ball valve with M10 connection for short direct temperature sensor with flat gasket
6556-475	¾” ball valve with M10 connection for short direct temperature sensor with flat gasket
6556-476	1” ball valve with M10 connection for short direct temperature sensor with flat gasket
6556-526	1¼” ball valve with M10 connection for short direct temperature sensor with flat gasket
6556-527	1½” ball valve with M10 connection for short direct temperature sensor with flat gasket

Gaskets

Article number	Description
2210-131	Gasket for short direct temperature sensor, 1 pc.
2210-061	Gasket for G¾B (R½) flow sensor (thread), 1 pc.
2210-062	Gasket for G1B (R¾) flow sensor (thread), 1 pc.
2210-063	Gasket for G1¼B (R1) flow sensor (thread), 1 pc.
2210-065	Gasket for G2B (R1½) flow sensor (thread), 1 pc.
2210-133	Gasket for DN25 PN25 flow sensor (flange), 1 pc.
2210-132	Gasket for DN40 PN25 flow sensor (flange), 1 pc.
2210-099	Gasket for DN50 PN25 flow sensor (flange), 1 pc.

Contact Kamstrup A/S for questions about further accessories.

3.2 Configuration number

The software configuration of MULTICAL® 603 is defined on the basis of the configuration number. Below you see an overview of the meter's configuration number. Each part of the configuration number is described in more detail in the following paragraphs.

A	-	B	-	CCC	-	DDD	-	EE	-	FF	-	GG	-	L	-	M	-	N	-	PP	-	RR	-	T	-	VVVV

Flow sensor position																										
Inlet	3																									
Outlet	4																									
Measuring unit																										
GJ		2																								
kWh		3																								
MWh		4																								
Gcal		5																								
Auto Detect CCC codes (UF x4)																										
Normal resolution (7 digits)				8 0 7																						
High resolution (8 digits)				8 1 8																						
Static CCC codes																										
Reed switch (7 digits)				0 x x																						
Electronic, fast pulse (7 digits)				1 x x																						
Electronic, fast pulse (8 digits)				2 x x																						
Kamstrup, UF X4 (7 digits)				4 x x																						
Kamstrup, UF X4 (8 digits)				5 x x																						
Electronic, slow pulse (7 digits)				9 x x																						
Display																										
Heat meter (standard)						210																				
Heat/cooling meter (standard)						310																				
Cooling meter						510																				
Tariffs																										
No active tariff								00																		
Power tariff								11																		
Flow tariff								12																		
t1-t2 tariff								13																		
Inlet tariff								14																		
Outlet tariff								15																		
Time controlled tariff								19																		
Heat/cooling volume tariff								20																		
PQ-tariff								21																		
Pulse inputs A and B																										
10 m³/h, 10 l/imp, pre-counter 1 (standard)										24		24														
Integration mode [1]																										
Adaptive mode (2-64 s) Display on														1												
Normal mode (32 s) Display on														2												
Fast mode (8 s) Display on														3												
Fast mode (2 s) Display on														4												
Adaptive mode (2-64 s) Display off														5												
Normal mode (32 s) Display off														6												
Fast mode (8 s) Display off														7												
Leakage limits (V1/V2)																										
OFF																0										
1.0 % of qp + 20 % of q																1										
1.0 % of qp + 10 % of q																2										
0.5 % of qp + 20 % of q																3										
0.5 % of qp + 10 % of q																4										
Leakage limit, cold water (In-A/In-B)																										
OFF																		0								
30 min. without pulses																		1								
One hour without pulses																		2								
Two hours without pulses																		3								
Pulse outputs C and D																										
Out-C: V1/4								5 ms												73						
Out-C: V1/1, Out-D: V2/1								3.9 ms												80						
Out-C: V1/1								3.9 ms												82						
Out-C: V1/4								22 ms												83						
E1 and V1 or E3 and V1								10 ms												94						
E1 and V1 or E3 and V1								32 ms												95						
E1 and V1 or E3 and V1								100 ms (0.1 s)												96						
Controlled output based on data commands																				99						

	RR	-	T	-	VVVV
Data logger profile					
Standard data logger profile	10				
Current values	11				
Ludwig	12				
Madrid	13				
Peter	14				
Diagnostic	15				
Encryption level					
Common key			2		
Individual key			3		
Customer label					
See paragraph 3.2.13					0000

[1] *Backlight is on for 15 s after activation of push button and is only possible with calculator type MC603-F*

3.2.1 Flow sensor position >A<

The A-code indicates installation of flow sensor in inlet or outlet. As the density and heat capacity of water vary with temperature, the calculator must correct for this based on installation type (A-code). Incorrect programming or installation leads to error of measuring. See paragraph 4.3 for further details on installation of flow sensor in inlet and outlet in heat and cooling installations.

Flow sensor position	A-code
Inlet	3
Outlet	4

3.2.2 Measuring unit >B<

The B-code indicates the measuring unit used in the energy register. The options are GJ, kWh, MWh or Gcal.

Measuring unit	B-code
GJ	2
kWh	3
MWh	4
Gcal [1]	5

[1] *Be aware that Gcal is not an SI unit. Read more about how Gcal is supported by M-Bus or wM-Bus in paragraph 11.*

3.2.3 Flow sensor coding >CCC<

The CCC-code optimises the display resolution for the selected flow sensor size, and at the same time the type approval regulations as to minimum resolution and maximum register overflow are observed. Below, the possible display resolutions with MULTICAL® 603 according to the type approval rules are shown.

		Number of decimals in display							
		Energy			Volume / Mass	Flow / Power			
qp [m³/h]	7/8 digits	kWh	MWh Gcal	GJ	m³ tons	l/h	m³/h	kW	MW
0.6 ≤ 1.5	7	1	4	3	3	0	-	1	-
0.6 ≤ 15	7	0	3	2	2	0	-	1	-
	8	1	4	3	3				-
4 ≤ 150	7	-	2	1	1	-	2	0	-
	8	0	3	2	2				-
40 ≤ 1500	7	-	1	0	0	-	1	-	2
	8	-	2	1	1				
400 ≤ 15000	7	-	-	-	-	-	-	-	-
	8	-	1	0	0		0		1

The CCC codes for MULTICAL® 603 are grouped according to the type of connected flow sensor. Nine groups have been created, which are all tied to a connection type. The connection type is selected as part of the meter's type number.

CCC	Flow sensor type	Pulse frequency	Bounce damping	Pulses + Data	Auto Detect	7/8 digits	Connection type		Pulse time	
							Direct	Opto	ON (LO)	OFF (HI)
0XX	Mechanical meters delivering slow pulses with bounce	< 1 Hz	Yes	P	No	7/8	L	-	>300 ms	>10 ms
1XX	Electronic meters with quick and bounce-free pulses	< 128 Hz	No	P		7	C [2]	P	>1 ms	>4 ms
2XX						8				
4XX	Electronic meters with quick and bounce-free pulses as well as data for info codes for ULTRAFLOW® X4			P+D		7	1-2-7-8 [1]	-		
5XX						8				
8XX	Electronic meters with quick and bounce-free pulses as well as data for info codes for ULTRAFLOW® X4 and Auto Detect				Yes	7/8				
9XX	Electronic meters with slow and bounce-free pulses	< 8 Hz		P	No		J		>30 ms	>100 ms

[1] *Connection type 1-2 means connection of 1 or 2 provided ULTRAFLOW®, 7-8 means prepared for 1 or 2 ULTRAFLOW®.*

[2] *Connection type C is used for previous versions of ULTRAFLOW® such as ULTRAFLOW® II and ULTRAFLOW® 65.*

In the following five paragraphs, the CCC codes are described.

3.2.3.1 ULTRAFLOW® X4

3.2.3.2 Mechanical flow sensors, reed switch

3.2.3.3 Electronic flow sensors, slow pulses

3.2.3.4 Electronic flow sensors, fast pulses

3.2.3.5 ULTRAFLOW® II, 65-SRT and X4

3.2.3.1 ULTRAFLOW® X4

Auto Detect enables the exchange of ULTRAFLOW® X4 on MULTICAL® 603 without changing the CCC code. MULTICAL® 603 can automatically adapt its CCC code to match the connected ULTRAFLOW® X4 via the function Auto Detect. Auto Detect is active with CCC code 8xx.

Auto Detect functions in such a way that MULTICAL® 603 during start-up automatically retrieves the correct information about pulse figure and qp from the connected ULTRAFLOW® X4 flow sensors. MULTICAL® 603 adapts its configuration to the values received from ULTRAFLOW® X4. Auto Detect is initiated when the calculator top and base are separated and reassembled. Read more about the connection of ULTRAFLOW® and Auto Detect in paragraph 8.1.

MULTICAL® 603 can be delivered with Auto Detect if this is delivered with a CCC code 8xx, but can also be delivered with a static CCC code 4xx (7 digits) or 5xx (8 digits). After the delivery, it is possible to change the CCC code and select Auto Detect and vice versa.

Normal resolution 7 digits	*High resolution 7 digits*	*High resolution 8 digits*

				Number of decimals in display								
CCC	**qp**	**Imp./L**	**7/8 digits**	kWh [1]	MWh Gcal	GJ	m^3 tons	l/h	m^3/h	kW	MW	**Connection type**
807	0,6…1000	300…0.15	7	Auto Detect, CCC codes: 416-419-498-451-437-478-420-479-458-470-480-447-481-491-492-493								1-2-7-8
818	0,6…1000	300…0.15	8	Auto Detect, CCC codes: 584-507-598-536-538-583-585-579-586-587-588-589-581-591-592-593								1-2-7-8

[1] *When selecting kWh, the meter automatically changes to MWh when the CCC code is selected for larger meters.*

Normal resolution 7 digits	*High resolution 7 digits*	*High resolution 8 digits*

				Number of decimals in display								
CCC	**qp**	**Imp./L**	**7/8 digits**	kWh	MWh Gcal	GJ	m^3 tons	l/h	m^3/h	kW	MW	**Connection type**
416	0.6	300	7	0	3	2	2	0	-	1	-	1-2-7-8
484	0.6	300	7	1	4	3	3	0	-	1	-	1-2-7-8
584	0.6	300	8	1	4	3	3	0	-	1	-	1-2-7-8
419	1.5	100	7	0	3	2	2	0	-	1	-	1-2-7-8
407	1.5	100	7	1	4	3	3	0	-	1	-	1-2-7-8
507	1.5	100	8	1	4	3	3	0	-	1	-	1-2-7-8
498	2.5	60	7	0	3	2	2	0	-	1	-	1-2-7-8
598 [1]	2.5	60	8	1	4	3	3	0	-	1	-	1-2-7-8
451	3.5	50	7	-	2	1	1	0	-	1	-	1-2-7-8
436	3.5	50	7	0	3	2	2	0	-	1	-	1-2-7-8
536 [1]	3.5	50	8	1	4	3	3	0	-	1	-	1-2-7-8
437	6	25	7	-	2	1	1	0	-	1	-	1-2-7-8
438	6	25	7	0	3	2	2	0	-	1	-	1-2-7-8
538 [1]	6	25	8	1	4	3	3	0	-	1	-	1-2-7-8
478	10	15	7	-	2	1	1	0	-	1	-	1-2-7-8
483	10	15	7	0	3	2	2	0	-	1	-	1-2-7-8
583 [1]	10	15	8	1	4	3	3	0	-	1	-	1-2-7-8
420	15	10	7	-	2	1	1	0	-	1	-	1-2-7-8
485	15	10	7	0	3	2	2	0	-	1	-	1-2-7-8
585 [1]	15	10	8	1	4	3	3	0	-	1	-	1-2-7-8
479	25	6	7	-	2	1	1	-	2	0	-	1-2-7-8
579 [1]	25	6	8	0	3	2	2	-	2	0	-	1-2-7-8
458	40	5	7	-	1	0	0	-	2	0	-	1-2-7-8
486	40	5	7	-	2	1	1	-	2	0	-	1-2-7-8
586 [1]	40	5	8	0	3	2	2	-	2	0	-	1-2-7-8
470	60	2.5	7	-	1	0	0	-	2	0	-	1-2-7-8
487	60	2.5	7	-	2	1	1	-	2	0	-	1-2-7-8
587 [1]	60	2.5	8	0	3	2	2	-	2	0	-	1-2-7-8
480	100	1.5	7	-	1	0	0	-	2	0	-	1-2-7-8
488	100	1.5	7	-	2	1	1	-	2	0	-	1-2-7-8
588 [1]	100	1.5	8	0	3	2	2	-	2	0	-	1-2-7-8
447	150	1	7	-	1	0	0	-	2	0	-	1-2-7-8
489	150	1	7	-	2	1	1	-	2	0	-	1-2-7-8
589 [1]	150	1	8	0	3	2	2	-	2	0	-	1-2-7-8
481	250	0.6	7	-	1	0	0	-	1	-	2	1-2-7-8
581 [1]	250	0.6	8	-	2	1	1	-	1	-	2	1-2-7-8
491	400	0.4	7	-	1	0	0	-	1	-	2	1-2-7-8
591 [1]	400	0.4	8	-	2	1	1	-	1	-	2	1-2-7-8
492	600	0.25	7	-	1	0	0	-	1	-	2	1-2-7-8
592 [1]	600	0.25	8	-	2	1	1	-	1	-	2	1-2-7-8
493	1000	0.15	7	-	1	0	0	-	1	-	2	1-2-7-8
593 [1]	1000	0.15	8	-	2	1	1	-	1	-	2	1-2-7-8

[1] With this CCC code, the number of pulses on the pulse outputs is reduced by factor 10 when selecting the PP codes 95 (32 ms) and 96 (100 ms).
The number of pulses is not reduced when selecting PP code 94 (10 ms).

3.2.3.2 Mechanical flow sensors, reed switch

				Number of decimals in display								
CCC	qp	L/imp.	7/8 digits	kWh	MWh Gcal	GJ	m³ tons	l/h	m³/h	kW	MW	Connection type
010	0,6…1.5	1	7	1	4	3	3	0	-	1	-	L
011	1,5…15	10	7	0	3	2	2	0	-	1	-	L
012	15…150	100	7	-	2	1	1	-	2	0	-	L
032 [1]	15…150	100	8	0	3	2	2	-	2	0	-	L
013	150…1,500	1,000	7	-	1	0	0	-	1	-	2	L
033 [1]	150…1,500	1,000	8	-	2	1	1	-	1	-	2	L
020	0,6…4	2.5	7	0	3	2	2	0	-	1	-	L
021	4…40	25	7	-	2	1	1	-	2	0	-	L
022	40…400	250	7	-	1	0	0	-	1	-	2	L

[1] With this CCC code, the number of pulses on the pulse outputs is reduced by factor 10 when selecting the PP codes 95 (32 ms) and 96 (100 ms). The number of pulses is not reduced when selecting PP code 94 (10 ms).

3.2.3.3 Electronic flow sensors, slow pulses

				Number of decimals in display								
CCC	qp	L/imp.	7/8 digits	kWh	MWh Gcal	GJ	m³ tons	l/h	m³/h	kW	MW	Connection type
910	0,6…1.5	1	7	1	4	3	3	0	-	1	-	J
935	0,6…10	1	8	0	3	2	2	0	-	1	-	J
911	1,5…15	10	7	0	3	2	2	0	-	1	-	J
936	10…100	10	8	-	2	1	1	-	2	0	-	J
912	15…150	100	7	-	2	1	1	-	2	0	-	J
932 [1]	15…150	100	8	0	3	2	2	-	2	0	-	J
913	150…1,500	1,000	7	-	1	0	0	-	1	-	2	J
933 [1]	150…1,500	1,000	8	-	2	1	1	-	1	-	2	J
934 [1, 2]	150…15,000	1,000	8	-	1	0	0	-	0	-	1	J
920	0,6…15	2.5	7	0	3	2	2	0	-	1	-	J
921	4…150	25	7	-	2	1	1	-	2	0	-	J
922	40…1,500	250	7	-	1	0	0	-	1	-	2	J

[1] With this CCC code, the number of pulses on the pulse outputs is reduced by factor 10 when selecting the PP codes 95 (32 ms) and 96 (100 ms). The number of pulses is not reduced when selecting PP code 94 (10 ms).

[2] qs = 1.8 x qp

3.2.3.4 Electronic flow sensors, fast pulses

				Number of decimals in display							
CCC	qp	imp./L	7/8 digits	kWh	MWh Gcal	GJ	m³ ton	m³/h	kW	MW	Connection type
175	15…30	7,5	7	-	1	0	0	2	0	-	C-P
176	25…50	4,5	7	-	1	0	0	2	0	-	C-P

				Number of decimals in display								
CCC	qp	L/imp.	7/8 digits	kWh	MWh Gcal	GJ	m³ tons	m³/h	kW	MW	DN size	Connection type
201 [1]	4…150	1	8	0	3	2	2	2	0	-	25-200	C-P
202 [1]	40…400	2.5	8	-	2	1	1	1	-	2	65-300	C-P
204 [1]	40…1,500	10	8	-	2	1	1	1	-	2	65-600	C-P
205 [1]	400…8,000	50	8	-	1	0	0	0	-	1	250-1400	C-P
206 [1]	400…15,000	100	8	-	1	0	0	0	-	1	250-1800	C-P

[1] With this CCC code, the number of pulses on the pulse outputs is reduced by factor 10 when selecting the PP codes 95 (32 ms) and 96 (100 ms). The number of pulses is not reduced when selecting PP code 94 (10 ms).
Note: *CCC = 147…150 have not been created, but CCC = 201…206 can be used instead. CCC = 201…205 consisted of 7 digits in MULTICAL® 602, but in MULTICAL®603, they have all now consist of 8 digits. CCC = 206 was only available in MULTICAL® 801, but is now also available in MULTICAL® 603.*

3.2.3.5 ULTRAFLOW® II, 65-SRT and X4

				Number of decimals in display								
CCC	qp	Imp./L	7/8 digits	kWh	MWh Gcal	GJ	m^3 tons	l/h	m^3/h	kW	MW	Connection type
116	0.6	300	7	0	3	2	2	0	-	1	-	C-P
184	0.6	300	7	1	4	3	3	0	-	1	-	C-P
284	0.6	300	8	1	4	3	3	0	-	1	-	C-P
119	1.5	100	7	0	3	2	2	0	-	1	-	C-P
107	1.5	100	7	1	4	3	3	0	-	1	-	C-P
207	1.5	100	8	1	4	3	3	0	-	1	-	C-P
198	2.5	60	7	0	3	2	2	0	-	1	-	C-P
298 [1]	2.5	60	8	1	4	3	3	0	-	1	-	C-P
151	3.5	50	7	-	2	1	1	0	-	1	-	C-P
136	3.5	50	7	0	3	2	2	0	-	1	-	C-P
236 [1]	3.5	50	8	1	4	3	3	0	-	1	-	C-P
137	6	25	7	-	2	1	1	0	-	1	-	C-P
138	6	25	7	0	3	2	2	0	-	1	-	C-P
238 [1]	6	25	8	1	4	3	3	0	-	1	-	C-P
178	10	15	7	-	2	1	1	0	-	1	-	C-P
183	10	15	7	0	3	2	2	0	-	1	-	C-P
283 [1]	10	15	8	1	4	3	3	0	-	1	-	C-P
120	15	10	7	-	2	1	1	0	-	1	-	C-P
185	15	10	7	0	3	2	2	0	-	1	-	C-P
285 [1]	15	10	8	1	4	3	3	0	-	1	-	C-P
179	25	6	7	-	2	1	1	-	2	0	-	C-P
279 [1]	25	6	8	0	3	2	2	-	2	0	-	C-P
158	40	5	7	-	1	0	0	-	2	0	-	C-P
186	40	5	7	-	2	1	1	-	2	0	-	C-P
286 [1]	40	5	8	0	3	2	2	-	2	0	-	C-P
170	60	2.5	7	-	1	0	0	-	2	0	-	C-P
187	60	2.5	7	-	2	1	1	-	2	0	-	C-P
287 [1]	60	2.5	8	0	3	2	2	-	2	0	-	C-P
180	100	1.5	7	-	1	0	0	-	2	0	-	C-P
188	100	1.5	7	-	2	1	1	-	2	0	-	C-P
288 [1]	100	1.5	8	0	3	2	2	-	2	0	-	C-P
147	150	1	7	-	1	0	0	-	2	0	-	C-P
189	150	1	7	-	2	1	1	-	2	0	-	C-P
289 [1]	150	1	8	0	3	2	2	-	2	0	-	C-P
181	250	0.6	7	-	1	0	0	-	1	-	2	C-P
281 [1]	250	0.6	8	-	2	1	1	-	1	-	2	C-P
191	400	0.4	7	-	1	0	0	-	1	-	2	C-P
291 [1]	400	0.4	8	-	2	1	1	-	1	-	2	C-P
192	600	0.25	7	-	1	0	0	-	1	-	2	C-P
292 [1]	600	0.25	8	-	2	1	1	-	1	-	2	C-P
195 [2]	1000	0.25	7	-	1	0	0	-	1	-	2	C-P
193	1000	0.15	7	-	1	0	0	-	1	-	2	C-P
293 [1]	1000	0.15	8	-	2	1	1	-	1	-	2	C-P

[1] With this CCC code, the number of pulses on the pulse outputs is reduced by factor 10 when selecting the PP codes 95 (32 ms) and 96 (100 ms). The number of pulses is not reduced when selecting PP code 94 (10 ms).

[2] qs = 1.8 x qp

3.2.4 Display code >DDD<

MULTICAL® 603 has 4 display loops; USER, TECH, SETUP and TEST. The TECH loop contains all display readings, with the exception of logged values and the differential registers, and this loop is *not* configurable. USER loop, however, is configurable and can be adapted to customer requirements by means of the DDD code (display code). As a minimum, the USER loop comprises the meter's legal readings.

The meter's legal readings, e.g. energy and volume reading, are basically displayed as 7-digit values. The display readings can be configured to 8-digit values via the CCC code.

The first digits of the three-digit DDD-code define the meter type comprised by the DDD-code in question. The table shows examples of a number of DDD-codes within each meter type. In the table,"1" indicates the first primary reading, whereas e.g. "1A" is the first secondary reading. The display automatically returns to reading "1" after 4 minutes.

Contact Kamstrup A/S for information about available display codes.

Displayref.	Primary reading	Displayref.	Secondary reading	Heat meter DDD = 110	Heat meter DDD = 210	Heat/cooling meter DDD = 310	Heat meter DDD = 410	Cooling meter DDD = 510	Heat/cooling meter DDD = 610	Volume meter DDD = 710
1.0	Heat energy (E1)			1	1	1	1		1	
		1.1	*Date of yearly logger*	1A	1A	1A	1A		1A	
		1.2	*Data of yearly logger [1]*							
		1.3	*Date of monthly logger*	1B	1B	1B	1B		1B	
		1.4	*Data of monthly logger [1]*							
		1.5	*E1 High-resolution*							
2.0	Cooling energy (E3)					2		1	2	
		2.1	*Date of yearly logger*			2A		1A	2A	
		2.2	*Data of yearly logger [1]*							
		2.3	*Date of monthly logger*			2B		1B	2B	
		2.4	*Data of monthly logger [1]*							
		2.5	*E3 High-resolution*							
3.0	Energy E2									
		3.1	*Energy E4*							
		3.2	*Energy E5*							
		3.3	*Energy E6*							
		3.4	*Energy E7*							
4.0	Volume V1			2	2	3	2	2	3	1
		4.1	*Mass V1*							
		4.2	*Pressure P1*							
		4.3	*Date of yearly logger*	2A	2A	3A	2A	2A	3A	1A
		4.4	*Data of yearly logger [1]*							
		4.5	*Date of monthly logger*	2B	2B	3B	2B	2B	3B	1B
		4.6	*Data of monthly logger [1]*							
		4.7	*V1 High-resolution*							
5.0	Volume V2									
		5.1	*Mass V2*							
		5.2	*Pressure P2*							
		5.3	*Date of yearly logger*							
		5.4	*Data of yearly logger [1]*							
		5.5	*Date of monthly logger*							
		5.6	*Data of monthly logger [1]*							

Displayref.	Primary reading	Displayref.	Secondary reading	Heat meter DDD = 110	Heat meter DDD = 210	Heat/cooling meter DDD = 310	Heat meter DDD = 410	Cooling meter DDD = 510	Heat/cooling meter DDD = 610	Volume meter DDD = 710
6.0	Hour counter			3	3	4	3	3	4	2
		6.1	*Error hour counter*	3A	3A	4A	3A	3A	4A	2A
7.0	t1 (inlet)			4	4	5	4	4	5	
		7.1	*Year-to-date average [2]*	4A	4A	5A	4A	4A	5A	
		7.2	*Month-to-date average [2]*	4B	4B	5B	4B	4B	5B	
8.0	t2 (outlet)			5	5	6	5	5	6	
		8.1	*Year-to-date average [2]*	5A	5A	6A	5A	5A	6A	
		8.2	*Month-to-date average [2]*	5B	5B	6A	5B	5B	6B	
9.0	t1-t2 (ΔΘ) (cooling indicated by -)			6	6	7	6	6	7	
		9.1	*E8 (V1·t1)*							
		9.2	*E9 (V1·t2)*							
10.0	t3									
		10.1	*E10 (V1·t3)*							
		10.2	*E11 (V2·t3)*							
11.0	t4 (programmed)									
12.0	Flow (V1)			7	7	8	7	7	8	3
		12.1	*Date of max this year [3]*	7A	7A	8A	7A	7A	8A	3A
		12.2	*Data of max this year [1]*							
		12.3	*Date of max yearly logger*							
		12.4	*Data of max yearly logger [1]*							
		12.5	*Date of max this month [3]*	7B	7B	8B	7B	7B	8B	3B
		12.6	*Data of max this month [1]*							
		12.7	*Date of max monthly logger*							
		12.8	*Data of max monthly logger 1*							
		12.9	*Date of min. this year [3]*	7C	7C	8C	7C	7C	8C	3C
		12.10	*Data of min. this year [1]*							
		12.11	*Date of min. yearly logger*							
		12.12	*Data of min. yearly logger [1]*							
		12.13	*Date of min. this month [3]*	7D	7D	8D	7D	7D	8D	3D
		12.14	*Data of min. this month [1]*							
		12.15	*Date of min. monthly logger*							
		12.16	*Data of min. monthly logger [1]*							
13.0	Flow (V2)									
14.0	Thermal power (V1)			8	8	9	8	8	9	
		14.1	*Date of max this year [3]*	8A	8A	9A	8A	8A	9A	
		14.2	*Data of max this year [1]*							
		14.3	*Date of max yearly logger*							
		14.4	*Data of max yearly logger [1]*							
		14.5	*Date of max this month [3]*	8B	8B	9B	8B	8B	9B	
		14.6	*Data of max this month [1]*							
		14.7	*Date of max monthly logger*							
		14.8	*Data of max monthly logger 1*							

Displayref.	Primary reading	Displayref.	Secondary reading	Heat meter DDD = 110	Heat meter DDD = 210	Heat/cooling meter DDD = 310	Heat meter DDD = 410	Cooling meter DDD = 510	Heat/cooling meter DDD = 610	Volume meter DDD = 710
		14.9	*Date of min. this year* [3]	8C	8C	9C	8C	8C	9C	
		14.10	*Data of min. this year* [1]							
		14.11	*Date of min. yearly logger*							
		14.12	*Data of min. yearly logger* [1]							
		14.13	*Date of min. this month* [3]	8D	8D	9D	8D	8D	9D	
		14.14	*Data of min. this month* [1]							
		14.15	*Date of min. monthly logger*							
		14.16	*Data of min. monthly logger* [1]							
15.0	Input A1 [4]			**9**	**9**	**10**	**9**	**9**	**10**	**4**
		15.1	*Meter number of input A1*	9A	9A	10A	9A	9A	10A	4A
		15.2	*L/imp. of input A1*	9B	9B	10B	9B	9B	10B	4B
		15.3	*Date of yearly logger*	9C	9C	10C	9C	9C	10C	4C
		15.4	*Data of yearly logger* [1]							
		15.5	*Date of monthly logger*	9D	9D	10D	9D	9D	10D	4D
		15.6	*Data of monthly logger* [1]							
16.0	Input B1 [4]			**10**	**10**	**11**	**10**	**10**	**11**	5
		16.1	*Meter number of input B1*	10A	10A	11A	10A	10A	11A	5A
		16.2	*L/imp. or Wh/imp. of input B1*	10B	10B	11B	10B	10B	11B	5B
		16.3	*Date of yearly logger*	10C	10C	11C	10C	10C	11C	5C
		16.4	*Data of yearly logger* [1]							
		16.5	*Date of monthly logger*	10D	10D	11D	10D	10D	11D	5D
		16.6	*Data of monthly logger* [1]							
17.0	Input A2 [4]									
		17.1	*Meter number of input A2*							
		17.2	*L/imp. of input A2*							
		17.3	*Date of yearly logger*							
		17.4	*Data of yearly logger* [1]							
		17.5	*Date of monthly logger*							
		17.6	*Data of monthly logger* [1]							
18.0	Input B2 [4]									
		18.1	*Meter number of input B2*							
		18.2	*L/imp. or Wh/imp. of input B2*							
		18.3	*Date of yearly logger*							
		18.4	*Data of yearly logger* [1]							
		18.5	*Date of monthly logger*							
		18.6	*Data of monthly logger* [1]							
19.0	TA2			**11**	**11**	**12**	**11**	**11**	**12**	**6**
		19.1	*TL2*	11A	11A	12A	11A	11A	12A	6A
20.0	TA3			**12**	**12**	**13**	**12**	**12**	**13**	**7**
		20.1	*TL3*	12A	12A	13A	12A	12A	13A	7A

Displayref.	Primary reading	Displayref.	Secondary reading	Heat meter DDD = 110	Heat meter DDD = 210	Heat/cooling meter DDD = 310	Heat meter DDD = 410	Cooling meter DDD = 510	Heat/cooling meter DDD = 610	Volume meter DDD = 710
21.0	TA4			13	13	14	13	13	14	8
		21.1	*TL4*	13A	13A	14A	13A	13A	14A	8A
22.0	A1 Heat energy with discount (A-)									
		22.1	*A2 Heat energy with surcharge (A+)*							
		22.2	*t5*							
23.0	CP (moving average)									
		23.1	*Current power of input B1* [5]							
		23.2	*Date of yearly logger*							
		23.4	*Data of yearly logger* [1]							
		23.5	*Date of monthly logger*							
		23.6	*Data of monthly logger* [1]							
24.0	Info code			14	14	15	14	14	15	9
		24.1	*Info event counter*	14A	14A	15A	14A	14A	15A	9A
		24.2	*Date for info logger*	14B	14B	15B	14B	14B	15B	9B
		24.3	*Data for info logger*							
25.0	Customer no. (N° 1)			15	15	16	15	15	16	10
		25.1	*Customer number (N° 2)*	15B	15B	16A	15B	15B	16A	10A
		25.22	*Puls value*	16	16	17	16	16	17	11
		25.23	*Nominal flow rate (qp)*	17	17	18	17	17	18	12
26.0	Differential energy (dE)									
		26.1	*Control energy (cE)*							
27.0	Differential volume (vol d)									
		27.1	*Control volume (vol c)*							

[1] Depending on the selected depth of yearly and monthly logs in the programmable data logger, these display readings can be empty.

[2] The average is volume based

[3] Only the date of min. /max is displayed in format 20xx.xx.xx. Serial reading includes the time (hh.mm) of the average value calculation too.

[4] Inputs A and B are regularly updated in the display of MULTICAL® 603, i.e. the display of the connected water or electricity meter will be in accordance with the display of MULTICAL® 603 without delay.

[5] The unit of this reading is fixed at kW.

3.2.5 Tariffs >EE<

MULTICAL® 603 has 3 extra registers TA2, TA3 and TA4, which can accumulate heat energy or cooling energy (EE=20 accumulates volume) parallel with the main register based on pre-programmed tariff conditions (to be stated when ordering the meter). Irrespective of the selected tariff type, the tariff registers are named TA2 TA3 and TA4 in the display.

As the main register is considered the legal billing register, it is accumulated no matter the selected tariff function. Tariff conditions TL2, TL3 and TL4 are monitored at every integration. If the tariff conditions are fulfilled, consumed heat energy is accumulated in either TA2, TA3 or TA parallel with the main register.

Example of power tariff (EE=11)

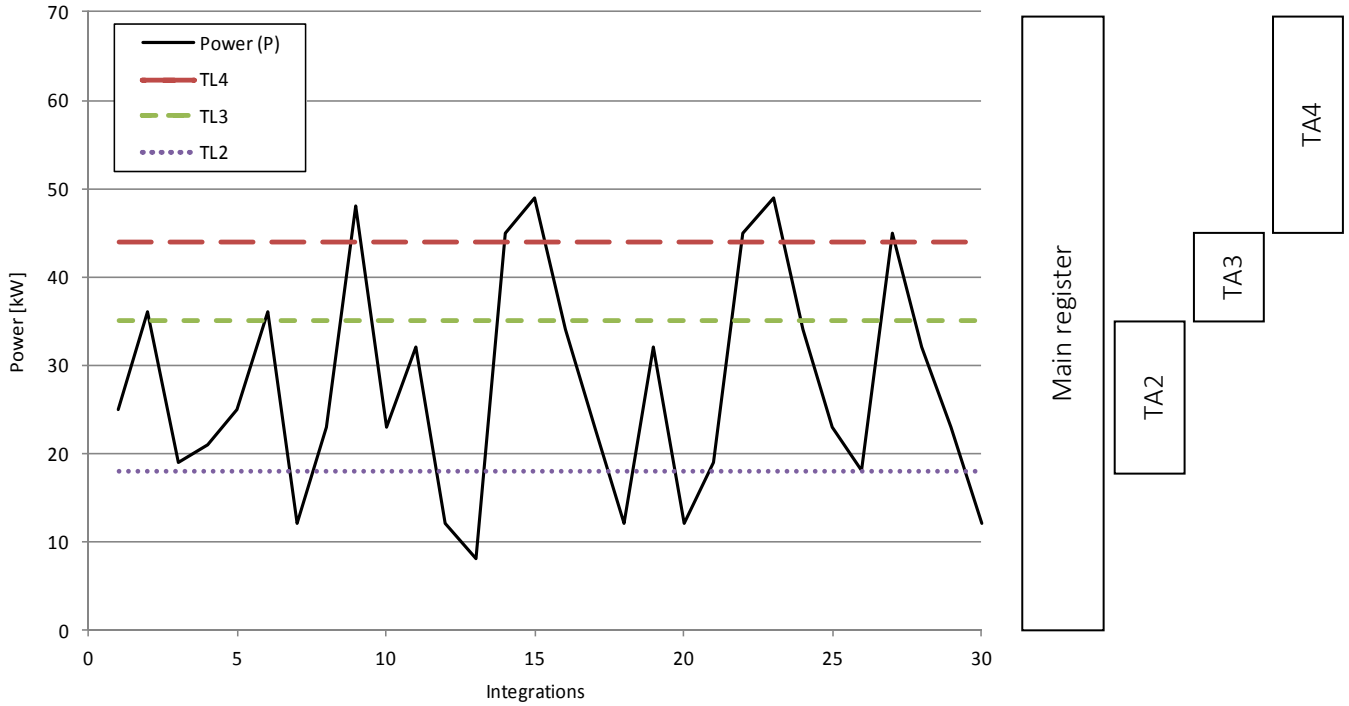

Three tariff conditions, TL2, TL3 and TL4, which are always used in the same tariff type, are connected to each tariff function. Therefore, it is not possible to “mix” two tariff types, except from the PQ tariff (EE=21).

TA2 shows energy consumed…

…above the power limit TL2

IMPORTANT: Out of consideration for backwards compatibility tariff register TA4 can be deactivated. Thus, the meter uses TA2 and TA3 only, and the tariff function works as in the previous model, MULTICAL® 602. TA4 is deactivated by setting the tariff limit TL4 at 0.

The below-mentioned table lists the tariff types, for which MULTICAL® 603 can be configured and shows the tariff types available for each meter type.

EE=	Tariff type	Function	**Heat meter** Meter type 2	**Heat/cooling meter** Meter type 3	**Heat meter** Meter type 4	**Cooling meter** Meter type 5	**Heat/cooling meter** Meter type 6	**Volume meter** Meter type 7
00	No active tariff	No function	•	•	•	•	•	•
11	Power tariff	Energy is accumulated in TA2, TA3 and TA4 on the basis of the power limits entered in TL2, TL3 and TL4	•		•	•		
12	Flow tariff	Energy is accumulated in TA2, TA3 and TA4 on the basis of the flow limits entered in TL2, TL3 and TL4	•		•	•		
13	t1-t2 tariff	Energy is accumulated in TA2, TA3 and TA4 on the basis of the Δt-limits entered in TL2, TL3 and TL4	•		•	•		
14	Inlet temperature tariff	Energy is accumulated in TA2, TA3 and TA4 on the basis of the t1-limits entered in TL2, TL3 and TL4.	•		•	•		
15	Outlet temperature tariff	Energy is accumulated in TA2, TA3 and TA4 on the basis of the t2-limits entered in TL2, TL3 and TL4.	•		•	•		
19	Time controlled tariff	TL2=Start time of TA2 TL3=Start time of TA3 TL4=Start time of TA4	•		•	•		
20	Heat/cooling volume tariff (TL2, TL3 and TL4 are not used)	Volume (V1) is divided into TA2 for heat (t1>t2) and TA3 for cooling (t1<t2). For heat/cooling meters, meter types 3 and 6, the energy accumulation also depends on Θ_{HC} (TA4 is not used in this tariff type).		•			•	•
21	PQ-tariff	Energy at P>TL2 is saved in TA2, and energy at Q>TL3 is saved in TA3	•		•	•		

EE=00 No active tariff

If no tariff function is required, you select the set-up EE=00.

The tariff function can, however, at a later stage be activated through reconfiguration via METERTOOL HCW (see paragraph 14).

EE=11 Power-controlled tariff

If the current power (P) exceeds TL2 but is lower than or equal to TL3, energy is counted in TA2 parallel to the main register. If the current power exceeds TL3 but is lower than or equal to TL4, energy is counted in TA3 parallel to the main register. If the current power exceeds TL4, energy is counted in TA4 parallel to the main register.

P ≤ TL2	Accumulation in main register only	TL4 > TL3 > TL2
TL3 ≥ P > TL2	Accumulation in TA2 and main register	
TL4 ≥ P > TL3	Accumulation in TA3 and main register	
P > TL4	Accumulation in TA4 and main register	

Setting up data, TL3 must be higher than TL2 and TL4 must be higher than TL3.

The power controlled tariff is e.g. used as a basis for the individual heat consumer's connection fee. Furthermore, this tariff type can provide valuable statistical data if the heating station considers new construction activities.

EE=12 Flow controlled tariff

If the current water flow (Q) exceeds TL2 but is lower than or equal to TL3, energy is counted in TA2 parallel to the main register. If the current water flow exceeds TL3 but is lower than or equal to TL4, energy is counted in TA3 parallel to the main register. If the current water flow exceeds TL4, energy is counted in TA4 parallel to the main register.

Q ≤ TL2	Accumulation in main register only	TL4 > TL3 > TL2
TL3 ≥ Q > TL2	Accumulation in TA2 and main register	
TL4 ≥ Q > TL3	Accumulation in TA3 and main register	
Q > TL4	Accumulation in TA4 and main register	

Setting up data, TL3 must be higher than TL2 and TL4 must be higher than TL3.

The flow controlled tariff is e.g. used as a basis for the individual heat consumer's connection fee. Furthermore, this tariff type can provide valuable statistical data if the heating station considers new construction activities.

When either power or flow tariff is used you obtain an overview of the total consumption compared to the part of the consumption used above tariff limits.

EE=13 t1-t2 tariff (ΔΘ)

If the current t1-t2 (ΔΘ) is lower than TL2 but exceeds or is equal to TL3, heat energy is counted in TA2 parallel to the main register. If the current cooling becomes lower than TL3 but is higher than or equal to TL4, energy is counted in TA3 parallel to the main register. If the current t1-t2 (ΔΘ) is lower than TL4, energy is counted in TA4 parallel to the main register.

ΔΘ ≥ TL2	Accumulation in main register only	TL4 < TL3 < TL2
TL3 ≤ ΔΘ < TL2	Accumulation in TA2 and main register	
TL4 ≤ ΔΘ < TL3	Accumulation in TA3 and main register	
ΔΘ < TL4	Accumulation in TA4 and main register	

Setting up tariff limits, TL3 must be lower than TL2 and TL4 must be lower than TL3.

The t1-t2 tariff can be used as a basis of weighted user charge. Low ΔΘ (small difference between inlet and outlet temperatures) is uneconomical for the heat supplier.

EE=14 Inlet temperature tariff

If the current inlet temperature (t1) exceeds TL2 but is lower than or equal to TL3, energy is counted in TA2 parallel to the main register. If the current inlet temperature exceeds TL3 but is lower than or equal to TL4, energy is counted in TA3 parallel to the main register. If the current inlet temperature exceeds TL4, energy is counted in TA4 parallel to the main register.

t1 ≤ TL2	Accumulation in main register only	TL4 > TL3 > TL2
TL3 ≥ t1 > TL2	Accumulation in TA2 and main register	
TL4 ≥ t1 > TL3	Accumulation in TA3 and main register	
t1 > TL4	Accumulation in TA4 and main register	

Setting up data, TL3 must be higher than TL2 and TL4 must be higher than TL3.

The inlet temperature tariff can be used as a basis for billing consumers who are guaranteed a certain inlet temperature. If the “guaranteed” minimum temperature is entered in TL4, the payable consumption is accumulated in TA4.

EE=15 Outlet temperature tariff

If the current outlet temperature (t2) exceeds TL2, but is lower than or equal to TL3, energy is counted in TA2 parallel to the main register. If the current outlet temperature exceeds TL3, but is lower than or equal to TL4, energy is counted in TA3 parallel to the main register. If the current outlet temperature exceeds TL4, energy is counted in TA4 parallel to the main register.

t2 ≤ TL2	Accumulation in main register only	TL4 > TL3 > TL2
TL3 ≥ t2 > TL2	Accumulation in TA2 and main register	
TL4 ≥ t2 > TL3	Accumulation in TA3 and main register	
t2 > TL4	Accumulation in TA4 and main register	

Setting up data, TL3 must be higher than TL2 and TL4 must be higher than TL3.

The outlet temperature tariff can be used as a basis of weighted user charge. A high outlet temperature indicates insufficient heat utilization which is uneconomical for the heat supplier.

EE=19 Time-controlled tariff

The time-controlled tariff is used for time division of heat consumption. If TL2 = 08:00, TL3 = 16:00 and TL4=23:00, the daily consumption from 08:00 until 15:59 is accumulated in TA2, whereas the consumption during the evening from 16:00 until 22:59 is accumulated in TA3, and the consumption during the night from 23:00 until 07:59 is accumulated in TA4.

TL2 must include fewer hours than TL3 and TL3 must include fewer hours than TL4.

From and incl. TL2 to TL3	Accumulation in TA2 and main register	TL3 must follow TL2 TL4 must follow TL3
From and incl. TL3 to TL4	Accumulation in TA3 and main register	
From and incl. TL4 to TL2	Accumulation in TA4 and main register	

The time-controlled tariff is suitable for billing in housing areas close to industrial areas with large district heating consumption as well as for billing industrial customers.

EE=20 Heat/cooling volume tariff

The heat/cooling volume tariff is used to divide volume into heat and cooling consumption in combined heat/cooling meters, i.e. the tariff divides the consumed volume into heat and cooling volume for combined heat/cooling meters. The total volume is accumulated in the register V1, whereas TA2 accumulates the volume consumed together with E1 (heat energy), and TA3 accumulates the volume consumed together with E3 (cooling energy).

EE=20 only functions in heat/cooling meters of the meter types 3 and 6.

(TA4 is not used in this tariff type).

$t1 > t2$ and $t1 \geq \theta_{hc}$	Volume is accumulated in TA2 and V1 (heat energy)	TL2 and TL3 are not used
$t1 > t2$ and $t1 \leq \theta_{hc}$	Volume is accumulated in V1 only	
$t2 > t1$ and $t1 \leq \theta_{hc}$	Volume is accumulated in TA3 and V1 (cooling energy)	
$t2 > t1$ and $t1 \geq \theta_{hc}$	Volume is accumulated in V1 only	
$t1 = t2$ and $t1 \geq \theta_{hc}$	Volume is accumulated in V1 only, no counting in energy registers	
$t1 = t2$ and $t1 \leq \theta_{hc}$	Volume is accumulated in V1 only, no counting in energy registers	

EE=21 PQ tariff

The PQ tariff is a combined power and flow tariff. TA2 functions as power tariff, and TA3 functions as flow tariff.

$P \leq TL2$ and $Q \leq TL3$	Accumulation in main register only	TL2 = power limit (P) TL3 = flow limit (Q)
$P > TL2$	Accumulation in TA2 and main register	
$Q > TL3$	Accumulation in TA3 and main register	
$P > TL2$ and $Q > TL3$	Accumulation in TA2, TA3 and main register	

The PQ tariff can e.g. be used for customers who pay a fixed charge based on max power and max flow (TL4 and TA4 are not used in this tariff type).

3.2.5.1 Tariff limits with Auto Detect of ULTRAFLOW® X4

Auto Detect enables the exchange of ULTRAFLOW® X4 on MULTICAL® 603 without changing the CCC code. MULTICAL® 603 can automatically adapt its CCC code to match the connected ULTRAFLOW® X4 via the function Auto Detect. Auto Detect is active with CCC code 8xx. Read more in paragraph 8.1.1.

The resolution of the tariff limits is adapted to the nominal flow qp and is thus controlled by the selected CCC-code. The tariff limits do not change value at Auto Detect, but the resolution and the unit of the value may change. An example with flow-controlled tariff is shown below.

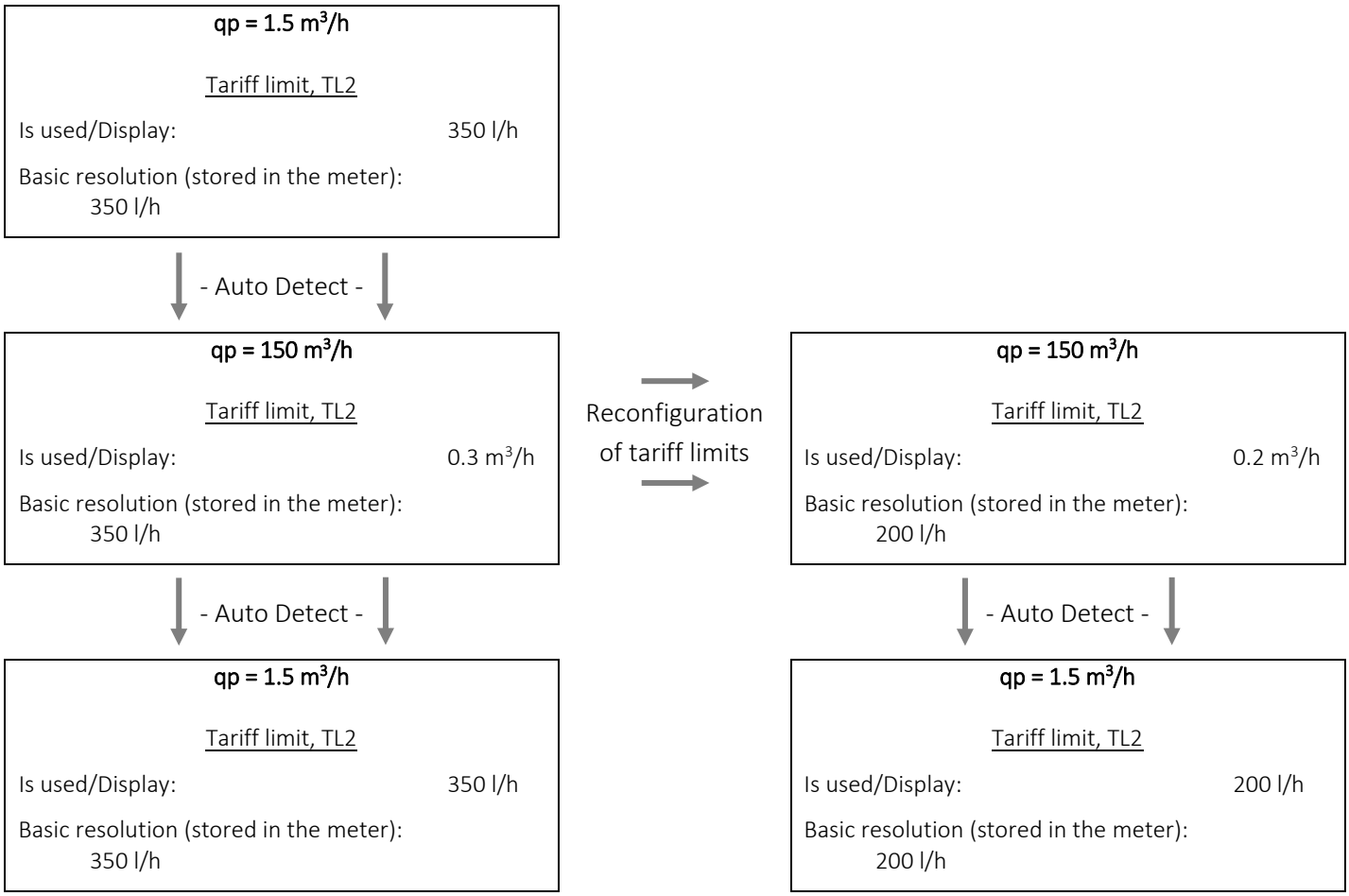

3.2.6 Pulse inputs A and B >FF-GG<

MULTICAL® 603 can have four extra pulse inputs (A1, A2, B1 and B2) which are placed on the communication modules (see paragraph 11 for further details on modules). The pulse inputs are used for acquisition and remote accumulation of pulses from e.g. mechanical water meters and electricity meters. The pulse inputs function independently of the meter itself. Therefore, they are not included in any energy calculation. The four pulse inputs are identically constructed and can be configured to receive pulses from water or electricity meters.

Pulse inputs A and B are placed on selected communication modules. If the module is installed in module slot 1 of MULTICAL® 603, the inputs A1 and B1 are identified, and likewise for module slot 2; A2 and B2.

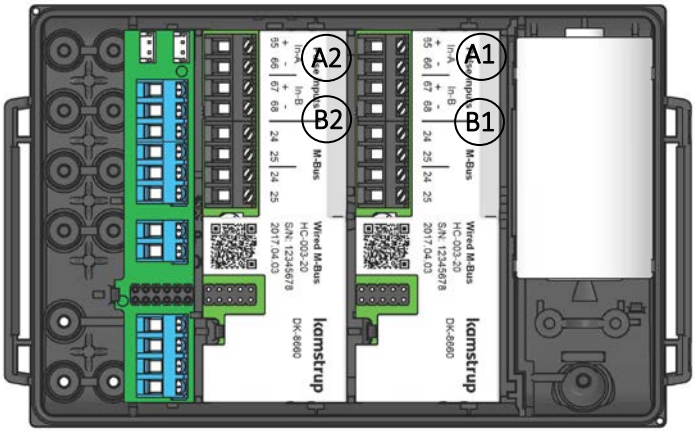

Note:
The pulse inputs A1 and A2 are always identically configured through the FF code, and the inputs B1 and B2 are likewise always identically configured through the GG code. Therefore, pay special attention to this when the modules are installed in the meter, so that they are installed in the correct module slot in regard to the equipment they are to be connected to.

The table below is a part of the type number overview, which shows the module type numbers. The table distinguishes between modules with pulse inputs (In-A, In-B) and modules with pulse outputs (Out-C, Out-D).

Modules

Data + 2 pulse inputs (In-A, In-B)	10
Data + 2 pulse outputs (Out-C, Out-D)	11
M-Bus, configurable + 2 pulse inputs (In-A, In-B)	20
M-Bus, configurable + 2 pulse outputs (Out-C, Out-D)	21
M-Bus, configurable + Thermal Disconnect	22
Wireless M-Bus, configurable, 868 MHz + 2 pulse inputs (In-A, In-B) [1]	30
Wireless M-Bus, configurable, 868 MHz + 2 pulse outputs (Out-C, Out-D)[1]	31
Analog output module 2 x 0/4…20 mA	40
Analog input module 2 x 0/4…20 mA	41
PQT Controller	43
Kamstrup Radio + 2 pulse inputs (In-A, In-B)	50
LON FT-X3 + 2 pulse inputs (In-A, In-B)	60
BACnet MS/TP + 2 pulse inputs (In-A, In-B)	66
Modbus RTU + 2 pulse inputs (In-A, In-B)	67
High Power Radio Router + 2 pulse inputs (In-A, In-B)	84

[1] *Internal or external antenna*

MULTICAL® 603 registers the accumulated consumption of the meters connected to the inputs and saves the counter values every month and every year on target date. The number of these yearly and monthly loggings depends on the selected logger profile (RR-code). Read more about data logger profiles in paragraph 3.2.11. In order to facilitate the identification during data reading, it is also possible to save the meter numbers of the four meters connected to the inputs. The meter numbers can either be programmed in the meter via the SETUP loop (for A1 and B1) or via METERTOOL HCW (for A1, B1, A2 and B2).

Note:
The selected datagram profile of the module, configured through the module's ZZZ code, controls which pulse input registers are collected through the module. By default, In-A1 and In-B1 are collected.

Two alarm types are connected to the pulse inputs, cold water leakage and external alarm, respectively. Unless otherwise informed by the customer, the meter is by default prepared for external alarm on all four inputs from the factory, but only with active leakage alarm on input A1 and A2 (like in MC602). Please contact Kamstrup A/S if you need leakage alarm possibility on input B1 and B2. Read more about cold water leakage in paragraph 3.2.9 and more about info codes in paragraph 7.7.

Below please find specification of requirements to pulse duration and pulse frequency for meters connected to pulse inputs:

Pulse inputs A and B In-A 65-66 and In-B: 67-68 via module	Electronic switch	Reed switch
Pulse input	680 kΩ pull-up to 3.6 V	680 kΩ pull-up to 3.6 V
Pulse ON	< 0.4 V for > 30 ms	< 0.4 V for > 500 ms
Pulse OFF	> 2.5 V for > 30 ms	> 2.5 V for > 500 ms
Pulse frequency	< 3 Hz	< 1 Hz
Electrical isolation	No	No
Max cable length	25 m	25 m
Requirements to external	Leakage current at function open < 1 μA	
Update of display	Follows the selected integration interval (from 2 to 64 s)	

The pulse inputs are placed on the module with the following terminal numbering:

		Connected meter	MULTICAL® 603
Input A1/A2:	Terminals 65-66	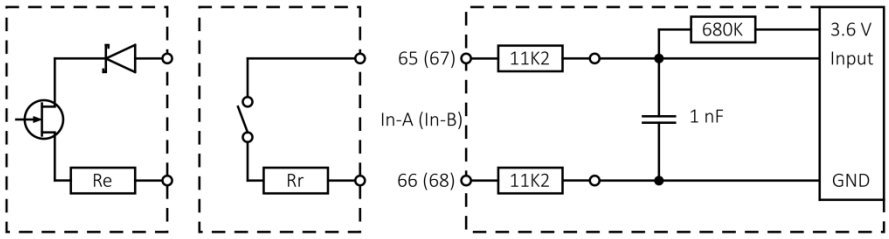	
Input B1/B2:	Terminals 67-68		

The pulse inputs are configured as a part of the meter's configuration number via the FF and GG codes. Upon receipt of order, the FF and GG codes are configured at 24 by default (unless otherwise informed by the customer). Valid FF and GG codes appear from the table below. The default code 24 is marked in green. The FF and GG codes can be reconfigured by means of METERTOOL HCW (see paragraph 14).

Input A1/A2		Input B1/B2						
FF-code	Max flow water meter	GG-code	Max flow water meter	Pre-counter	Wh/imp	l/imp	Measuring unit and decimal place	
01	100 m³/h	01	100 m³/h	1	-	100	vol A/vol b (m³)	000000.0
02	50 m³/h	02	50 m³/h	2	-	50	vol A/vol b (m³)	000000.0
03	25 m³/h	03	25 m³/h	4	-	25	vol A/vol b (m³)	000000.0
04	10 m³/h	04	10 m³/h	10	-	10	vol A/vol b (m³)	000000.0
05	5 m³/h	05	5 m³/h	20	-	5	vol A/vol b (m³)	000000.0
06	2.5 m³/h	06	2.5 m³/h	40	-	2.5	vol A/vol b (m³)	000000.0
07	1 m³/h	07	1 m³/h	100	-	1	vol A/vol b (m³)	000000.0
24	10 m³/h	24	10 m³/h	1	-	10	vol A/vol b (m³)	00000.00
25	5 m³/h	25	5 m³/h	2	-	5	vol A/vol b (m³)	00000.00
26	2.5 m³/h	26	2.5 m³/h	4	-	2.5	vol A/vol b (m³)	00000.00
27	1 m³/h	27	1 m³/h	10	-	1	vol A/vol b (m³)	00000.00
40	1000 m³/h	40	1000 m³/h	1	-	1000	vol A/vol b (m³)	0000000
		GG-code	Max power Electricity meter	Pre-counter	Wh/imp	l/imp	Measuring unit and decimal place	
		50	2500 kW	1	1000	-	EL A/EL b (kWh)	0000000
		51	150 kW	60	16.67	-	EL A/EL b (kWh)	0000000
		52	120 kW	75	13.33	-	EL A/EL b (kWh)	0000000
		53	75 kW	120	8.333	-	EL A/EL b (kWh)	0000000
		54	30 kW	240	4.167	-	EL A/EL b (kWh)	0000000
		55	25 kW	340	2.941	-	EL A/EL b (kWh)	0000000
		56	20 kW	480	2.083	-	EL A/EL b (kWh)	0000000
		57	15 kW	600	1.667	-	EL A/EL b (kWh)	0000000
		58	7.5 kW	1000	1	-	EL A/EL b (kWh)	0000000
		59	750 kW	10	100	-	EL A/EL b (kWh)	0000000
		60	2500 kW	2	500	-	EL A/EL b (kWh)	0000000
		61	75 kW	100	10	-	EL A/EL b (kWh)	0000000
		62	15 kW	500	2	-	EL A/EL b (kWh)	0000000
		70	25000 kW	1	10000	-	EL A/EL b (MWh)	00000.00

Inputs for external alarm:

98		98		External alarm input; Alarm=LO (normally open)
99		99		External alarm input; Alarm=HI (normally closed)

The registers which are connected to the pulse inputs can be read in the meter’s TECH loop, USER loop (depending on selected DDD code) and via data communication. In addition, it is possible to pre-set the meter count of the four pulse inputs at the values of the connected meters at the time of commissioning. This can either be carried out via the meter's SETUP loop (for A1 and B1) or via METERTOOL HCW (for A1, B1, A2 and B2).

Input A1	
Counter value	
Meter No. A1	
L/imp. for A1	
Yearly date	
Yearly data	
Monthly date	
Monthly data	

Input B1	
Counter value	
Meter No. B1	
Wh/imp. for B1	
Yearly date	
Yearly data	
Monthly date	
Monthly data	

3.2.7 Integration mode >L<

MULTICAL® 603 uses time-based integration, which means that accumulated volume and energy are calculated at fixed, or variable, time intervals. The time interval is configurable via the L-code and independent of the water flow speed. Please be aware that choice of integration mode in combination with selected power supply defines the meter's battery lifetime. Please see paragraph 10.3 regarding the meter's battery lifetime.

It is possible to choose between eight integration modes; five modes where the meter's display remains turned on, and three modes where the meter's display is turned off 8 min. after the latest registered activation of a key (4 min. after the latest registered activation of the key, the meter returns to its first primary reading, and after additional 4 min., the display turns off). In periods with the display switched off, a display segment flashes at an interval of 30 s to indicate that the meter is active ("heart beat" indication).

MULTICAL® 603 can be ordered with a backlit display (meter type 603-F). With the exception of integration mode 9, it applies that the background lighting is activated by pressing a key and remains lit for 15 s. If integration mode 9 is selected, the display and the background lighting both remain turned on (mains supply is required).

		L-code	
Integration mode	Backlight period (only 603-F)	Display on	Display off
Adaptive mode (2-64 s)	15 s.	1	5
Normal mode (32 s)	15 s.	2	6
Fast mode (8 s)	15 s.	3	7
Fast mode (2 s)	15 s.	4	-

Adaptive mode (2-64 s)

Adaptive mode is the meter's intelligent integration mode, in which the time interval is currently adjusted. This mode combines the long battery lifetime obtained in Normal mode with the high measuring and calculation resolution obtained in Fast mode.

When the thermal system is stable, i.e. runs at stable flow and power, the meter will use a time interval of 64 s. MULTICAL® 603 continuously measures if flow and power have changed, and if this is the case, reduces the interval. Depending on the change, the meter can reduce the integration interval to 2 seconds, which means that the meter calculates accumulated volume and energy every 2 seconds. Thereby, higher resolution and higher precision are obtained during periods with changes in the system. MULTICAL® 603's adaptive algorithm reacts to flow changes down to 1 %.

For applications with two flow sensors, it is worth noting that MULTICAL® 603 only measures changes in flow and power of V1 and not of both V1 and V2. This means that the integration of registers related to V1 and V2, respectively takes place at the same time and is time-based. In adaptive mode, the integration interval is only adjusted according to the changes of V1.

When the system is stable, the meter gradually returns to the 64 s. interval. MULTICAL® 603 reacts quickly to changes in the system by lowering the time interval; however, it gradually returns to the time interval of 64 s. as the system becomes stable. This is illustrated in the figure below.

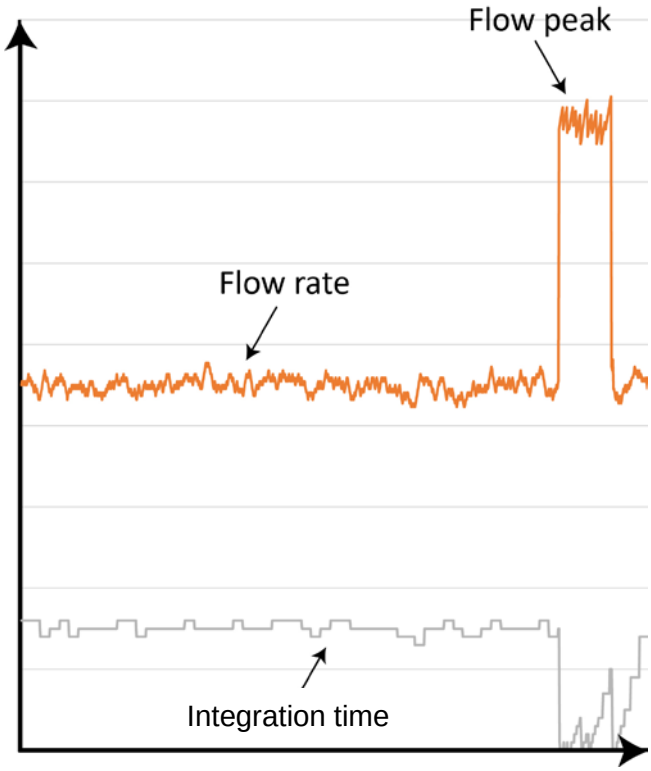

Thus, in adaptive mode MULTICAL® 603 measures at high resolution during periods with changes in the system requiring accurate measurements and saves battery power during periods with no changes in the thermal system.

Adaptive mode is recommended for all systems including those with tap water exchanger.

Normal mode (32 s)

In normal mode the integration interval is set at 32 seconds, which means that the meter calculates accumulated volume and energy every 32 seconds.

Normal mode is recommended for systems with hot water tank and similar systems in which changes are not taking place too quickly.

Fast mode (8 s)

In fast mode (8 s) the integration interval is set at 8 seconds, which means that the meter calculates accumulated volume and energy every 8 seconds.

Fast mode (8 s) is recommended for all systems including those with tap water exchanger.

Fast mode (2 s)

In fast mode (2 s), the integration interval is set at 2 seconds, which means that the meter calculates accumulated volume and energy every 2 seconds.

Fast mode (2 s) is recommended for all systems including those with tap water exchanger. Fast mode is especially suitable for applications in which the meter is equipped with analog outputs.

Battery lifetime is typically 14 years in Fast mode (2 s).

Integration concept

The integration concept for MULTICAL® 603 is illustrated in the figure below.

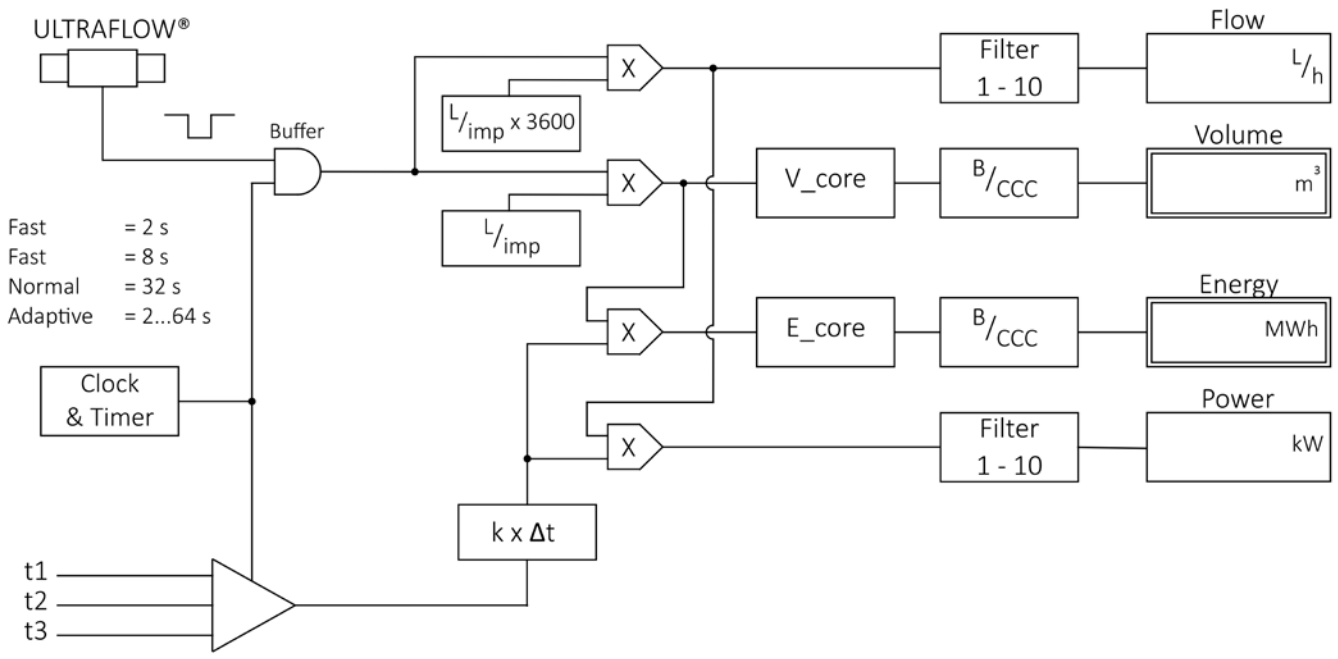

3.2.8 Leakage limits (V1, V2) >M<

MULTICAL® 603 can be used for leakage monitoring when two flow sensors are connected to MULTICAL® 603 on the inputs V1 and V2. Note that it is only possible to connect two flow sensors on the calculator types 603-E/F. See the type number overview in paragraph 3.1.

The M code defines the leakage limit, i.e. the sensitivity of the leakage monitoring. If a leakage is detected in the system, an info code indicating leakage or burst is activated, depending on the size of the leakage. The leakage search is based on a difference in mass (ΔMass) between the calculated mass of V1 and V2, respectively. The calculation of this mass difference is performed over 24 hours, the response time of the info code indicating a leakage thus being 24 hours. The burst search is based on a difference in flow of V1 and V2, respectively. The burst search is performed over a period of 120 s. Read more about these info codes in the info code overview in paragraph 7.7.

The sensitivity of a leakage can be adjusted via the M-code, whereas the sensitivity of a burst is clearly defined. This also appears from the table of the M-code below. It is possible to detect leakages down to 15 kg/h through the connection of the two flow sensors of qp 1.5 m³/h. Both info codes for leakage and burst can be deactivated via the M-code (M = 0).

Leakage limits (V1, V2)		M-code
Leakage	Burst	
No active leak search	No active burst search	0
ΔMass ≈ > 1.0 % of qp + 20 % q	Δflow > 20 % of qp	1
ΔMass ≈ > 1.0 % of qp + 10 % q	**Δflow > 20 % of qp**	**2**
ΔMass ≈ > 0.5 % of qp + 20 % q	Δflow > 20 % of qp	3
ΔMass ≈ > 0.5 % of qp + 10 % q	Δflow > 20 % of qp	4

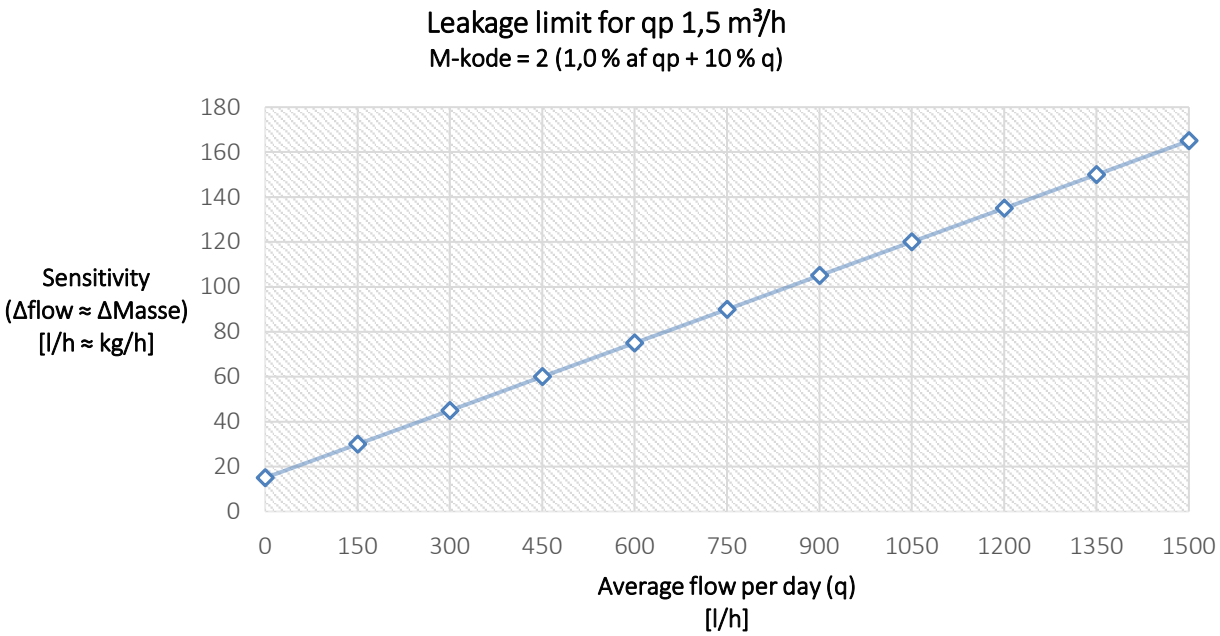

Permanent operational monitoring

Leakage monitoring can with advantage be extended to include permanent operational monitoring as it just requires the installation of a set of three sensors instead of a sensor pair. In Denmark, for example, the permanent operational monitoring reduces the number of random samples to three meters per random sampling lot, regardless of the size of the measuring lot. Read more in the installation guide for permanent operational monitoring (Kamstrup guide 5511-730_DK). The purpose of these instructions is to provide caretakers, installers and consulting engineers with the information needed about Kamstrup's leakage monitoring system and permanent operational monitoring.

3.2.9 Cold water leakage (In-A, In-B) >N<

The pulse inputs A and B of MULTICAL® 603 can be used for cold water leakage monitoring. Basically, however, cold water leakage monitoring is only active on input A (A1/A2), unless otherwise agreed with the customer. When MULTICAL® 603 is used for leak monitoring, the sensitivity is determined by the configuration of the N-code.

Leakage monitoring is measured over a period of 24 hours. The N code defines the resolution by which the 24 hours are divided; either 48 intervals of half an hour, 24 intervals of one hour or 12 intervals of two hours. If the meter registers minimum one pulse during each of these intervals over the full period, info code 8, which indicates leakage, is activated. The info code is not activated until after the 24-hour period, however it is reset again as soon as the meter registers an interval without pulses.

The table below shows the three available N-codes. Upon receipt of order the N-code is configured at 2 by default (unless otherwise informed by the customer).

Cold water leakage search (In-A1/A2)	N-code
No active leak search	0
30 min. without pulses	1
One hour without pulses	2
Two hours without pulses	3

3.2.10 Pulse outputs C and D >PP<

MULTICAL® 603 can have up to four pulse outputs (C1, C2, D1 and D2) which are placed on the communication modules (see paragraph 11 for further details on modules). The pulse outputs have three application options:

- The sending of selected meter count registers (which are determined by the selected country code).
- Controlled output, which means that the pulse outputs can be controlled by data commands.
- Pulse transmitter/divider so that the pulse signal from V1 and V2 is sent via the pulse outputs.

Pulse outputs C and D are placed on selected communication modules. If the module is installed in module slot 1 of MULTICAL® 603, the outputs C1 and D1 are identified, and likewise for module slot 2; C2 and D2.

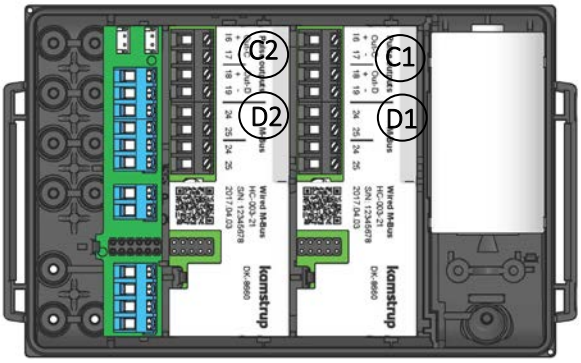

Note:
The pulse outputs C1 and C2 are always configured identically, and likewise, the outputs D1 and D2 are always configured identically. All four outputs are configured through the meter's PP code. Therefore, pay special attention to this when the modules are installed in the meter, so that they are installed in the correct module slot in regard to the equipment they are to be connected to.

The table below is a part of the type number overview, which shows the module type numbers. The table distinguishes between modules with pulse inputs (In-A, In-B) and modules with pulse outputs (Out-C, Out-D).

Modules	
Data + 2 pulse inputs (In-A, In-B)	10
Data + 2 pulse outputs (Out-C, Out-D)	11
M-Bus, configurable + 2 pulse inputs (In-A, In-B)	20
M-Bus, configurable + 2 pulse outputs (Out-C, Out-D)	21
M-Bus, configurable + Thermal Disconnect	22
Wireless M-Bus, configurable, 868 MHz + 2 pulse inputs (In-A, In-B) [1]	30
Wireless M-Bus, configurable, 868 MHz + 2 pulse outputs (Out-C, Out-D)[1]	31
Analog output module 2 x 0/4…20 mA	40
Analog input module 2 x 0/4…20 mA	41
LON FT-X3 + 2 pulse inputs (In-A, In-B)	60
BACnet MS/TP + 2 pulse inputs (In-A, In-B)	66
Modbus RTU + 2 pulse inputs (In-A, In-B)	67

[1] *Internal or external antenna*

Below please find specification of requirements to pulse duration and pulse frequency for meters connected to pulse inputs:

Pulse outputs C and D Out-C: 16-17 and Out-D: 18-19 via module			Pulse duration:
Pulse value *When pulse outputs are used for e.g. remote counting of energy and volume with the same resolution as the display [1]*	Heat meter:	Out-C = CE+ Out-D = CV	Selectable: 10 ms, 32 ms or 100 ms
	Cooling meter:	Out-C = CE- Out-D = CV	
	Heat/cooling meter:	Out-C = CE+ Out-D = CE-	
Pulse value *When pulse outputs are used as pulse transmitter/divider for e.g. regulation purposes*	Transmitter:	Out-C = V1 Out-D = V2	4 ms
	Divider:	Out-C = V1/4	22 ms

Communication module	HC-003-11 (Before 2017-05)	HC-003-11 (After 2017-05)
	HC-003-21 & -31 (Before 2018-04)	HC-003-21 & -31 (After 2018-04)
Pulse output type	Open collector (OB)	Opto FET
External voltage	5…30 VDC	5…48 VDC/AC
Current	1…10 mA	1…50 mA
Residual voltage	$U_{CE} \approx 1$ V at 10 mA	$R_{ON} \leq 40\ \Omega$
Electrical isolation	2 kV	2 kV
Max cable length	25 m	25 m

[1] *At high resolution, the pulse outputs will be reduced by 1:10 when selecting 32 ms and 100 ms. See paragraph 3.2.10 about PP codes.*

Please note the polarity when making the connection. The pulse outputs are placed on the module with the following terminal numbering:

		Open collector (OB)	Opto FET
Pulse output C:	Terminals 16-17	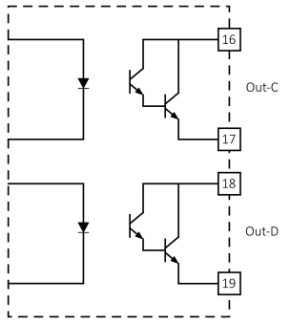	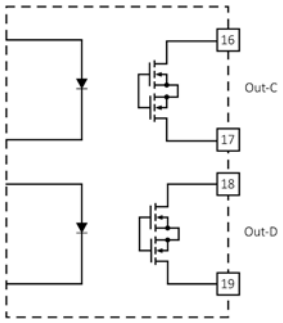
Pulse output D:	Terminals 18-19		

The pulse outputs are configured as part of the meter's configuration number via the PP code. Upon receipt of order the PP-code is configured at 95 by default (unless otherwise informed by the customer). Valid PP-codes appear from the table below. The default code 95 is marked in green. It is possible to reconfigure the PP code by means of METERTOOL HCW (see paragraph 14).

Pulse outputs C and D	PP-code
Pulse transmitter/divider	
Out-C: V1/4 (5 ms)	73
Out-C: V1/1, Out-D: V2/1 (3.9 ms)	80
Out-C: V1/1 (3.9 ms)	82
Out-C: V1/4 (22 ms)	83
Meter count registers	
10 ms	94
32 ms	**95**
100 ms (0.1 s)	96
Output controlled by data commands	
Controlled output	99

Pulse transmitter/divider

The meter can be configured in such a way that the pulse outputs serve as either pulse transmitters or pulse dividers. If the outputs are to serve as pulse transmitters, the meter's PP-code is configured to either 80 or 82. Irrespective of whether both outputs are connected or floating, the PP-code 80 with pulse transmitter on both Out-C and Out-D results in an increased power consumption. Therefore, mains supply is recommended when configuring the PP-code 80. If the outputs are to serve as pulse dividers, the meter's PP-code is configured to 83 with 22 ms pulse duration or PP code 73 with 5 ms pulse duration.

The function pulse transmitter/divider can be used for, among other things, external leakage protection, the possibility of connecting an additional calculator to the same flow sensor and for external control systems that regulates according to flow pulses, for example Siemens RVD 250 and Danfoss ECL 310, both of which can use the PP code 73 with 5 ms pulse width.

Pulse output with meter count registers

As previously described, the outputs are configured in pairs (C1/C2) and (D1/D2), which means that it is possible to send output from two of the following meter count registers on pulse output C1/C2 and pulse output D1/D2, respectively:

- E1 (Heat energy)
- E3 (Cooling energy)
- V1 (Volume)

Note: As the selected meter count registers are configured by the country code, the configuration cannot be changed after delivery.

Pulse outputs are by default configured with the following registers:

Meter function	Out-C1/C2	Out-D1/D2
Heat meter	E1 (CE+)	V1 (CV)
Heat/cooling meter	E1 (CE+)	E3 (CE-)
Cooling meter	E3 (CE-)	V1 (CV)
Volume meter	V1 (CV)	V1 (CV)

Meter type
1 2 4
3, 6
5
7

The resolutions of the pulse outputs always follow the least significant digit in the display, which is determined by the CCC code (see paragraph 3.2.3) e.g. at CCC=119: 1 pulse/kWh and 1 pulse/0.01 m^3.

Be aware that the pulses are accumulated in the integration interval and sent at every integration at a fixed frequency. This is shown in the example below.

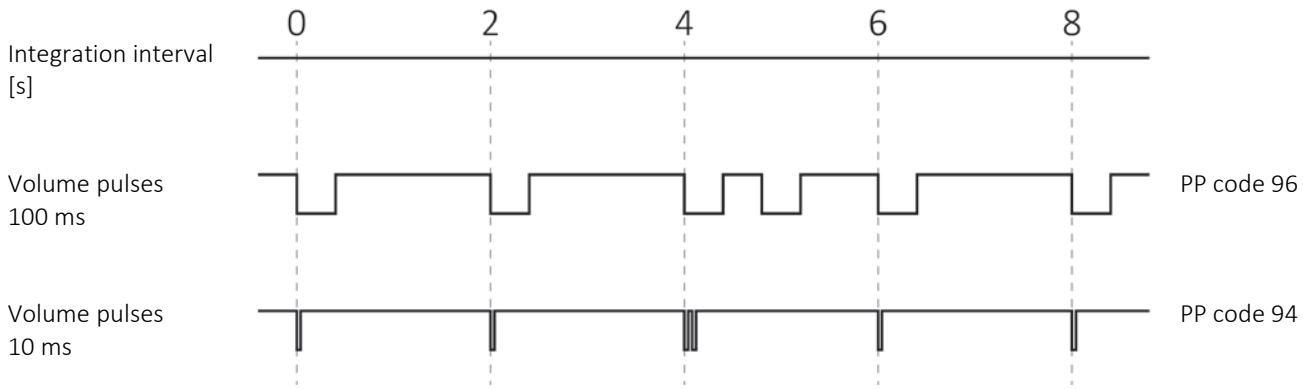

Controlled output

The meter can be configured for data command control of pulse outputs. If controlled output is required, the PP-code is to be configured at 99. As previously described, the outputs are configured in pairs (C1/C2) and (D1/D2), which means that connected external equipment can switch the meters' outputs, in the pairs C1/C2 and D1/D2, OFF (open opto-transistor output) and ON (closed opto-transistor output) respectively via KMP data commands.

Output status can be read via the KMP-registers and after a power-on reset the outputs will have the same status as before the power failure as every change of status is saved in the meter's EEPROM.

3.2.11 Data logger profile >RR<

MULTICAL® 603 has a permanent memory (EEPROM), in which the results from various data loggers are saved. The data logger is programmable. The required data logger profile is selected via the RR-code of the configuration number. Unless otherwise stated by the customer, the RR-code is set to 10, which is a default data logger profile (equal to the data logger in MULTICAL® 602). If data logging of other registers, different intervals and logging depths are required, other data logging profiles can be composed to match individual requirements.

The programmable data logger includes the following six data loggers:

- Yearly logger
- Monthly logger
- Daily logger
- Hourly logger
- Minute logger1
- Minute logger2

Note:
When the module's datagram is configured via the module's ZZZ-code, it is important that the necessary registers, which are to be transmitted via the datagram, are also available in the meter. Therefore, there must be consistence between the choice of RR-code in the meter and the ZZZ-code in the module. Please contact Kamstrup A/S for further information.

Both data logger registers and logging depths are programmable, and individual logging profiles can be combined as required by the customer. Below is an example of a logger profile (RR-code=10), which is based on, but not identical to the logger in MULTICAL® 602.

Logger type		Year	Month	Day	Hour	Minute 1	Minute 2
Logging interval		-	-	-	-	15m	1m
Logging depth		20	36	460	1400	0	0
Date (YY.MM.DD)	Year, month and day of logging time.	x	x	x	x	x	x
Clock (hh.mm.ss)	Time	x	x	x	x	x	x
E1	E1 = V1(t1-t2)k Heat energy	x	x	x	x		
E2	E2 = V2(t1-t2)k Heat energy	x	x				
E3	E3 = V1(t2-t1)k Cooling energy	x	x	x	x		
E4	E4 = V1(t1-t3)k Inlet energy	x	x				
E5	E5 = V2(t2-t3)k Outlet energy or tap from outlet	x	x				
E6	E6 = V2(t3-t4)k Tap water energy, separate	x	x				
E7	E7 = V2(t1-t3)k Tap water energy from inlet	x	x				
E8	E8 = m3 x t1 (inlet)	x	x				
E9	E9 = m3 x t2 (outlet)	x	x				
E10	E10 = t3 x V1	x	x				
E11	E11 = t3 x V2	x	x				
ΔE	Differential energy						
cE	Control energy						
A1	Heat energy with discount						
A2	Heat energy with surcharge						
TA2	Tariff register 2	x	x				
TA3	Tariff register 3	x	x				
TA4	Tariff register 4	x	x				
V1	Volume register for Volume 1	x	x	x	x		
V2	Volume register for Volume 2	x	x	x	x		
ΔV	Differential volume						
cV	Control volume						
In-A1	Extra water meter connected to Input A1	x	x	x	x		
In-B1	Extra water or electricity meter connected to Input B1	x	x	x	x		
In-A2	Extra water meter connected to Input A2	x	x	x	x		
In-B2	Extra water or electricity meter connected to Input B2	x	x	x	x		
M1	Mass corrected V1	x	x	x	x		
M2	Mass corrected V2	x	x	x	x		
INFO	Information code	x	x	x	x		
Flow1MaxDate Year	Date stamp for max flow V1 for the year	x					

Logger type		Year	Month	Day	Hour	Minute 1	Minute 2
Flow1Max Year	Value of max Flow V1 for the year	x					
Flow1MinDate Year	Date stamp for min. flow V1 for the year	x					
Flow1Min Year	Value for min. Flow V1 for the year	x					
Power1MaxDate Year	Date stamp for max power for the year	x					
Power1Max Year	Value of max power for the year	x					
Power1MinDate Year	Date stamp for min. power for the year	x					
Power1Min Year	Value for min. power for the year	x					
Flow1MaxDate Month	Date stamp for max flow V1 for the month		x				
Flow1Max Month	Value of max Flow V1 for the month		x				
Flow1MinDate Month	Date stamp for min. flow V1 for the month		x				
Flow1Min Month	Value for min. Flow V1 for the month		x				
Power1MaxDate Month	Date stamp for max power for the month		x				
Power1Max Month	Value for max power for the month		x				
Power1MinDate Month	Date stamp for min. power for the month		x				
Power1Min Month	Value for min. power for the month		x				
COP Year (SCOP)	Coefficient Of Performance, year						
COP Month	Coefficient Of Performance, month						
t1TimeAverage Day	Time average (day) of t1						
t2TimeAverage Day	Time average (day) of t2						
t3TimeAverage Day	Time average (day) of t3						
t1TimeAverage Hour	Time average (hour) of t1						
t2TimeAverage Hour	Time average (hour) of t2						
t3TimeAverage Hour	Time average (hour) of t3						
P1AverageDay	Time averaged analog input (day) of P1						
P2AverageDay	Time averaged analog input (day) of P2						
P1AverageHour	Time averaged analog input (hour) of P1						
P2AverageHour	Time averaged analog input (hour) of P2						
HourCounter	Accumulated number of operating hours	x	x				
ErrorHourCounter	Accumulated number of error hours	x	x				
t1	Current value of t1						
t2	Current value of t2						
t3	Current value of t3						
t4	Current value of t4						
t1-t2 (Δt)	Current differential value						
Flow (V1)	Current water flow of V1						
Flow (V2)	Current water flow of V2						
Power 1	Current heat power (E1)						
P1	Current value of analog input of P1						
P2	Current value of analog input of P2						

3.2.12 Encryption level >T<

MULTICAL® 603 must be ordered with encrypted data transmission between module and reading system. Data is encrypted with 128 bit AES counter mode encryption. Data transmission can be encrypted with either a common or an individual encryption key.

If you choose individual encryption key (T-code 3) the reading system must know the encryption key of the individual meter in order to read the meter. The encryption key is sent to the customer and then ”matched” with the serial number of the individual meter in the reading system.

If you choose common encryption key (T-code 2), this key can be used for reading a customer-specific number of meters. The key is created by Kamstrup A/S. A customer can have several encryption keys, e.g. one for each meter type.

Note: The common encryption key is only offered to customers on request.

The encryption level is configured as part of the meter’s configuration number via the T-code. Upon receipt of order the T-code is by default configured at 3 - individual encryption key (unless otherwise informed by the customer). The encryption level can be configured when submitting the order. The encryption level cannot be changed after delivery.

Encryption level	T-code
Encryption via common key (customer-specific)	2
Encryption with individual key	3

Encryption keys can be downloaded from Kamstrup’s customer portal “My Kamstrup” at www.kamstrup.com. Encryption keys are automatically entered in USB Meter Reader and READy.

IMPORTANT: If the encryption key in the meter is changed after delivery of the meter, the encryption type is changed from individual to common key or vice versa, the T-code is not changed. The T-code shown in the meter’s display always indicates with which encryption type the meter was ordered and not the meter’s current encryption type.

3.2.13 Customer label >VVVV<

A 20x50 mm customer label can be printed on the meter’s front. The customer label to be printed on the meter’s front is determined by the configuration number VVVV-code. The customer label can show utility logo, a bar code or the like. By default the meter’s serial number is written in the customer label field.

Please contact Kamstrup A/S for information about possible customer labels as well as the creation of a new customer label.

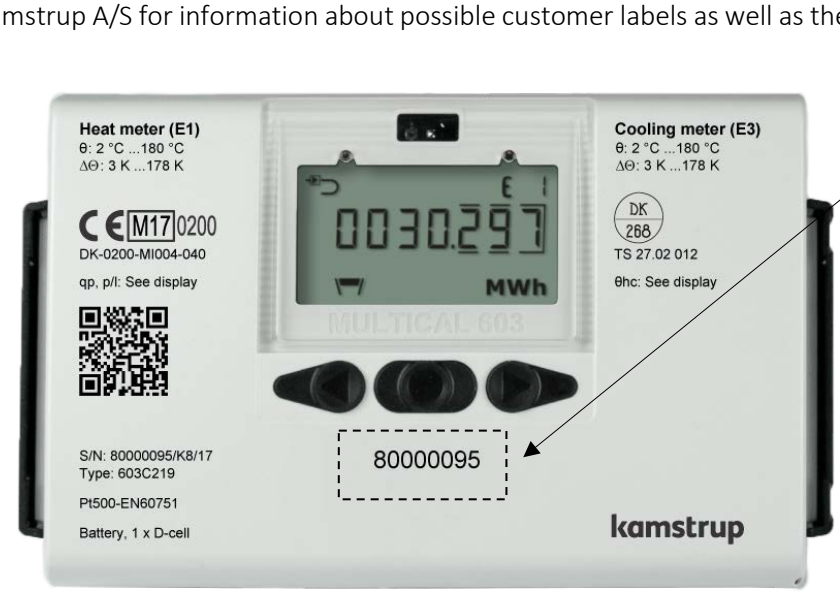

3.3 Data

The country code is selected as the last two characters of the meter's static part of the type number.

Static data		*Dynamic data*
603-xxxx	-	xxxxxxxx
Written on the meter's front		Can be displayed

Type 603 - □ - □ - XX - □ - □□ - □ - □□ - □□

In addition to defining the language on the meter label as well as approval and verification marks, the country code is also used to control the configuration of a number of meter data.

During production of MULTICAL® 603 it is programmed with a number of measuring values in the fields listed overleaf. Unless the order includes specific requirements as to configuration, MULTICAL® 603 be supplied with the default values from the table.

	Automatic	To be stated in order	Standard
Serial no. (S/N) [1] (See paragraph 3.4)	80,000,000	-	-
Customer no. Display No. 1 = 8 digits MSD Display No. 2 = 8 digits LSD	-	Up to 16 digits	Customer no. equal to S/N
Yearly target date 1 (MM.DD)	-	MM=1-12 and DD=1-31	Depends on country code
Monthly target date 1 (DD)	-	DD = 1-31	
Yearly target date 2 (MM.DD)	-	MM=1-12 and DD=1-31 + 00.00 (disabled) [2]	
Monthly target date 2 (DD)	-	DD = 1-31 + 00 (disabled) [2]	
Averaging period for min./max of power (P) and flow (Q) (See paragraph 7.5)	-	1…1440 min.	60 min.
Averaging period of CP (See paragraph 7.2)	-	5…30 days	7 days
θ_{hc} Heat/cooling shift Only active if meter type 6 is selected (See paragraph 7.4)	-	2…180.00 °C + 250.00 °C [3]	Heat/cooling, meter type 6: 25.00 °C
Date/time	20YY.MM.DD/ hh.mm.ss	GMT ± 12.0 hours (Can be defined at half hour intervals)	-
GMT offset	-	-	Depends on country code
Primary address of M-Bus, Modbus and BACnet [4]	-	Address 0-250	Last 2-3 digits of customer number
M-Bus ID no. (used for secondary address)	-	-	Customer no.
wM-Bus ID no.	-	-	Serial number

Offset of t1 and t2 (± 0.99K) [4] (See paragraph 7.3)	To be entered on the basis of R_0 of the sensor element as well as the cable resistance. If no sensor data is available, offset is set to 0.00 K.	-	-
t2 preset Only active if meter type 4 is selected.	-	0,01…185.00 °C + 250.00 °C	250.00 °C
t3 preset	-	0,01…185.00 °C + 250.00 °C	250.00 °C
t4 preset	-	0,01…185.00 °C + 250.00 °C	5.00 °C
t5 preset Only relevant for meter types 1 and 2. (See paragraph 7.1.3)	-	0.01…185.00 °C	50.00 °C
Scheduler profile (See paragraph 7.12)	-	Created scheduler profiles	Depends on the country code (Default deactivated)
DST (Daylight Saving Time) (See paragraph 7.11)	-	Enabled / Disabled	Depends on country code

[1] Serial no. (factory set unique serial number) is written on the meter and cannot be changed after factory programming.

[2] Yearly target date 2 (MM.DD) and monthly target date 2 (DD) are set to 00.00 and 00, respectively. If these target dates are disabled, the meter just uses yearly target date 1 and monthly target date 1.

[3] θ_{hc} = 250.00 °C disconnects the function. In all other meter types than 6, θ_{hc} is disabled and cannot be enabled after delivery.

[4] Applying both to the internal M-Bus and the two module slots in the meter. At submission of order, you can choose "fixed M-Bus address" which means that all meters included in the order are configured with the same primary address.

[5] R_0 is the resistance value of the sensor element in ohm (Ω) at 0 °C.

3.3.1 Serial number and extended availability

The serial number consists of 8 digits (**xxxxxxxx**/WW/yy) a 2-digit device code for extended availability (xxxxxxxx/**WW**/yy) and the production year (xxxxxxxx/WW/**yy**). The serial number (factory set unique serial number) is written on the meter and cannot be changed after factory programming.

You need the encryption key of the specific meter to be able to read the meter via wireless M-Bus. This encryption key is sent to the customer if the meter is purchased directly from Kamstrup A/S. Customers who buy their meters from wholesalers can download their encryption key from Kamstrup's "Encryption Key Service" where the customer can create a user profile without contacting Kamstrup A/S. Next, the customer enters the meter's serial number as well as the two digits (device code) for extended availability and downloads the encryption key. The two digits have been introduced in order to provide a secure method for customers who buy Kamstrup meters from a wholesaler to download the required encryption keys.

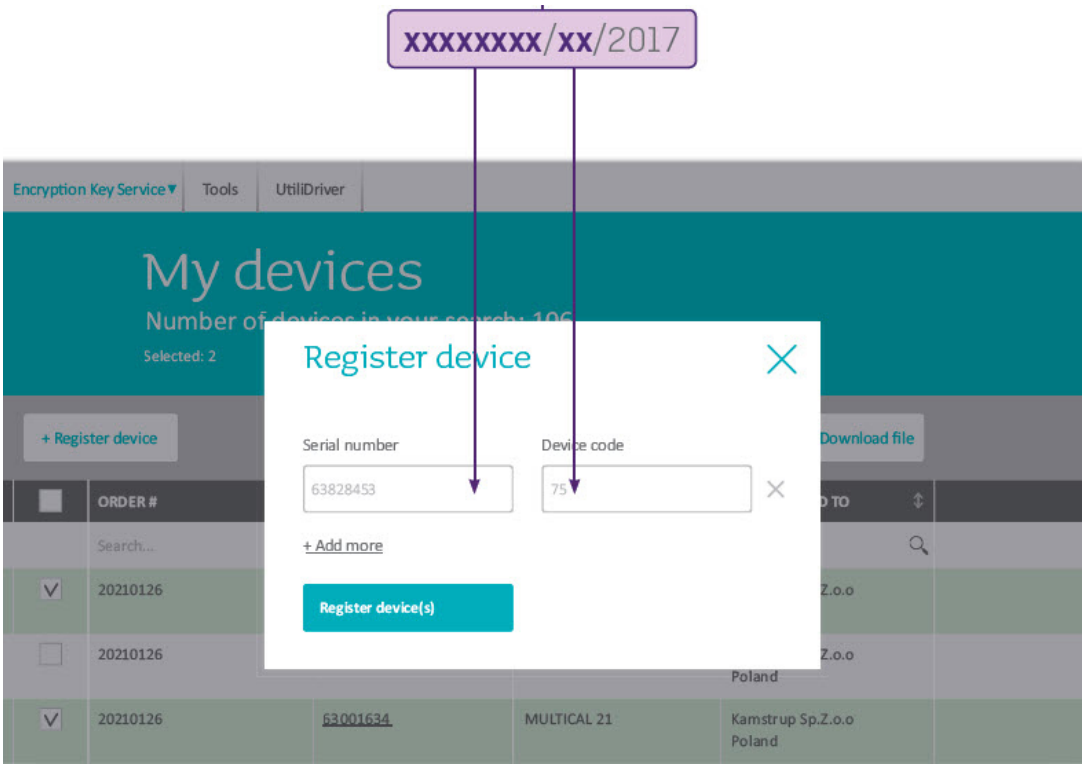

3.3.2 Target date

MULTICAL® 603 can be configured with up to two yearly target dates and two monthly target dates. These dates determine on which date data is to be logged (saved) in the meter's interval logger. To avoid confusion about at which time of the day the meter saves data, MULTICAL® 603 also, in addition to the date, includes a time stamp for the logging. This time stamp is not included in this meter's predecessor, MULTICAL® 602, which simply stamps data with a date. This difference also means that the date stamps of the two meters vary in spite of the fact that both meters are configured with a target date, e.g. 01.01 [MM.DD]. Note that although the date stamps of the two meters are different, both meters will in practice log (save) data at the same time. This is illustrated by the following example:

	MULTICAL® 403/603	*MULTICAL® 402/602*
Yearly target date [MM.DD]	01.01	01.01
Monthly target date [DD]	01	01
Date/time [20YY.MM.DD/ hh.mm.ss]	2019.01.01 / 00.00.XX	2018.12.31 / 24.00.XX [1]

[1] *Note that it is not possible to read out this time stamp from the meter.*

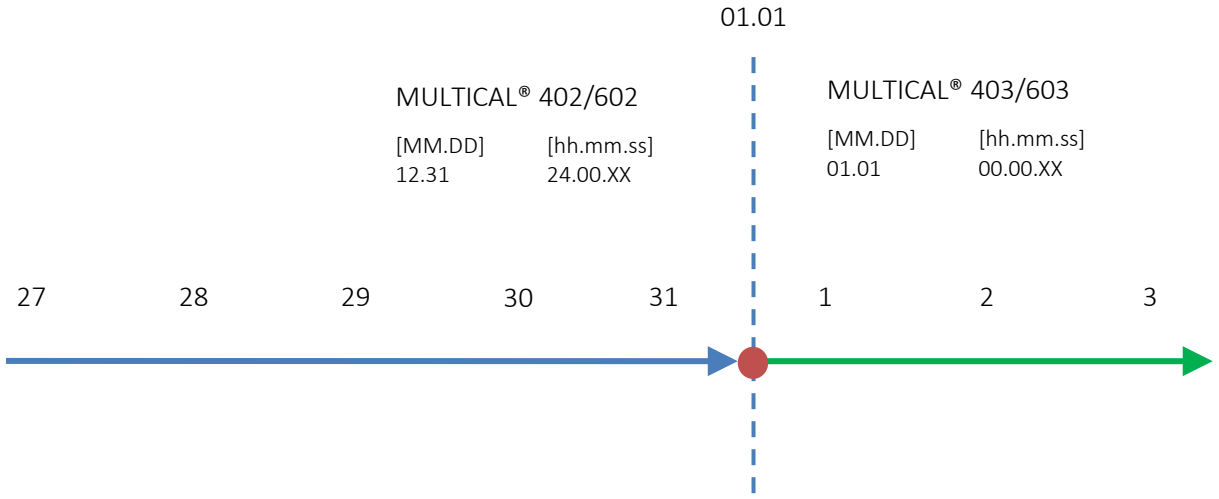

4 Installation

4.1 Installation requirements

Prior to installation of MULTICAL® 603 in connection with flow sensors, the heating system should be flushed while a fitting piece replaces the meter. If ULTRAFLOW® is mounted, the adhesive wafers are removed from the meter's inlet and outlet, and the flow sensor is mounted with couplings/flanges. New fibre gaskets in original quality must be used.

If other couplings than the original ones from Kamstrup A/S are used, you must make sure that the threaded lengths of the couplings do not prevent proper tightening of the sealing surface.

The positioning of the flow sensor in inlet or outlet can be configured in the calculator before commissioning, see paragraph 6.3 about SETUP loop. The flow direction is indicated by an arrow on the flow sensor.

In order to avoid cavitation, the back pressure at ULTRAFLOW® (the pressure at the flow sensor outlet) must typically be minimum 1 bar at qp and minimum 2 bar at qs. This applies to temperatures up to approx. 80 °C.

When the installation has been completed, water flow can be turned on. The valve on the flow sensor's inlet side must be opened first.

ULTRAFLOW® must not be exposed to lower pressure than the ambient pressure (vacuum).

Permissible operating conditions

Ambient temperature:	5…55°C (indoors). Max 30 °C for optimum battery lifetime.
Medium temperature of heat meter:	2…130 °C with calculator mounted on a wall
	15…90 °C with calculator mounted on ULTRAFLOW®
Medium temperature of cooling meter:	2…130 °C with calculator mounted on a wall
Media temperature of heat/cooling meter:	2…130 °C with calculator mounted on a wall
System pressure ULTRAFLOW®:	1.0…16 bar for threaded meters
	1.5…25 bar for flange meters

Electrical installations

MULTICAL® 603 is available with either 24 VAC/VDC or 230 VAC supply modules. The supply modules are connected to mains using two-wire cable without protective earth.
Use a strong connection cable with an outer diameter of max 5-8 mm and ensure correct cable stripping and cable relief in the meter. It must be ensured that the entire installation complies with current regulations, the supply cable to the meter must never be protected by a larger fuse than permitted. In case of doubt, it is recommended to take advice from an authorised electrician.

For installation in Denmark, SIK-message 27/09, “Installation to mains connected equipment for registration of consumption” applies to meters connected to both 230 VAC and 24 VAC powered via safety transformer, see paragraph 10.9.

Service

Neither welding nor freezing is allowed while ULTRAFLOW® is mounted. Before starting such work, ULTRAFLOW® must be dismounted. If the meter is mains supplied, the supply must be switched off.

In order to facilitate the replacement of the meter, closing valves should always be mounted on both sides of the flow sensor.

Under normal operating conditions no pipe strainer is required in front of the meter.

4.2 Mounting of MULTICAL® 603 calculator

4.2.1 Compact mounting

Compact mounting means that the calculator is mounted directly on ULTRAFLOW®. If there is risk of condensation (e.g. in cooling applications), the calculator ought to be wall-mounted. Furthermore, in cooling applications ULTRAFLOW® must be the condensation-proof version.

The construction of MULTICAL® 603 can provide minimum installation depth, using an angle fitting when mounting ULTRAFLOW®. Due to the design the mounting radius remains 75 mm in critical places.

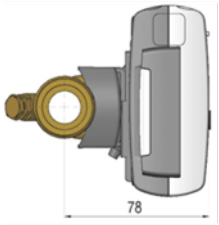

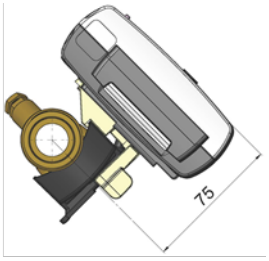

4.2.2 Wall mounting

The calculator can be mounted directly on an even wall. Wall mounting requires a wall fitting (3026-207), which is available as an accessory to MULTICAL® 603. MULTICAL® 603 is mounted on the wall fitting by sliding the calculator onto the fitting in the same way as it is done by compact mounting.

4.2.3 Position of calculator

If the flow sensor is installed in humid or condensing environment, the calculator must be wall mounted and positioned higher than the flow sensor.

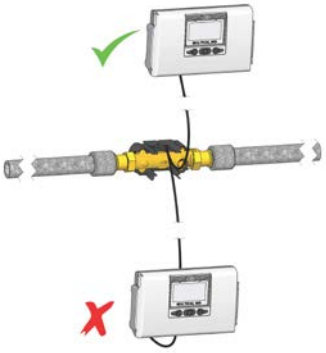

4.3 Mounting in inlet or outlet

MULTICAL® 603 is configured for flow sensor mounted in either forward or return pipe during installation. In the display, the flow sensor position is indicated by a symbol; subjacent the A-code of the configuration number is programmed to 3 or 4 for flow sensor position in inlet and outlet, respectively. The table below indicates installation conditions of heat meters and cooling meters:

Formula	k-factor	A-code and display	Hot pipe	Cold pipe	Installation
Heat meter E1=V1(t1-t2)k	k-factor for t1 and V1 in inlet	A-code = 3 Display 	V1 and t1	t2	See application no. 1 in paragraph 7.1
	k-factor for t2 and V1 in outlet	A-code = 4 Display 	t1	V1 and t2	See alternative position of flow sensor in application no. 1 in paragraph 7.1
Cooling meter E3=V1(t2-t1)k	k-factor for t1 and V1 in inlet	A-code = 3 Display 	t2	V1 and t1	See application no. 1 in paragraph 7.1
	k-factor for t2 and V1 in outlet	A-code = 4 Display 	V1 and t2	t1	See alternative position of flow sensor in application no. 1 in paragraph 7.1

4.4 EMC conditions

MULTICAL® 603 has been designed and CE-marked according to EN 1434 Class A and C (corresponding to electromagnetic environment: Class E1 and E2 of the Measuring Instruments Directive) and can thus be installed in both residential and industrial environments.

All control cables must be drawn separately and not parallel to e.g. power cables or other cables with the risk of inducing electromagnetic interference. There must be a distance of min. 25 cm between signal cables and other installations.

4.5 Climatic conditions

MULTICAL® 603 is designed for indoor installation in non-condensing environments with ambient temperatures from 5…55 °C, but max 30 °C in order to obtain optimal battery lifetime. Protection class IP 65 of the calculator allows splashes of water, but the meter must not be submerged.

4.6 Sealing

According to EN 1434, MULTICAL® 603 must have protection devices, which can be sealed to the effect that after sealing, both before and after the heat meter has been correctly installed, it is impossible to dismount, remove or change the heat meter or its adjustment devices without visibly damaging meter or sealing. Correct sealing of MULTICAL® 603 includes two levels, installation sealing and verification sealing, a breach of sealing has different consequences on each level.

Installation sealing

Having completed the installation of MULTICAL® 603 installation sealing is the last thing to be done. The installation seal is the 'outermost' sealing level to be completed by the installer/utility. The installation sealing must make sure that calculator top and base cannot be separated and that flow sensor and temperature sensors cannot be dismounted without visible signs that a separation has taken place. In practice the installation sealing can be done by means of wire and seal, sealing label or a combination. The sealing is the utility's security that unauthorized persons cannot undiscovered change the installation around the meter. A breach of the installation sealing alone does not influence the meter's possibility for renewed installation sealing or the fact that it is legal in relation to its approval and verification.

Installation sealing and SETUP loop

In order to bring MULTICAL® 603 back to SETUP loop after installation, the calculator top and base must be separated, after which the SETUP loop can be accessed either via the front keys or METERTOOL HCW. Separation of calculator top and base implies that the calculator's installation seal is broken.

Verification seal

The MULTICAL® 603 verification seals consist of both mechanical and electronic sealing. The verification seals marked "LOCK" and "TEST" are placed on the white verification cover in the calculator top. These seals can be seen as the 'innermost' sealing level, which may only be broken by authorized laboratories in connection with test and reverification of the meter. If the meter is to be used for legal operation in relation to approval and verification after breach of verification sealing, the broken seals must be resealed. The sealing must be carried out by an authorized laboratory using the sealing mark (void label) of the laboratory.

5 Dimensional sketches

All measurements in [mm]. The weight of a MULTICAL® 603 calculator is 450 g, including D-cell battery (HC-993-02), M-Bus module (HC-003-21) and wM-Bus module (HC-003-30).

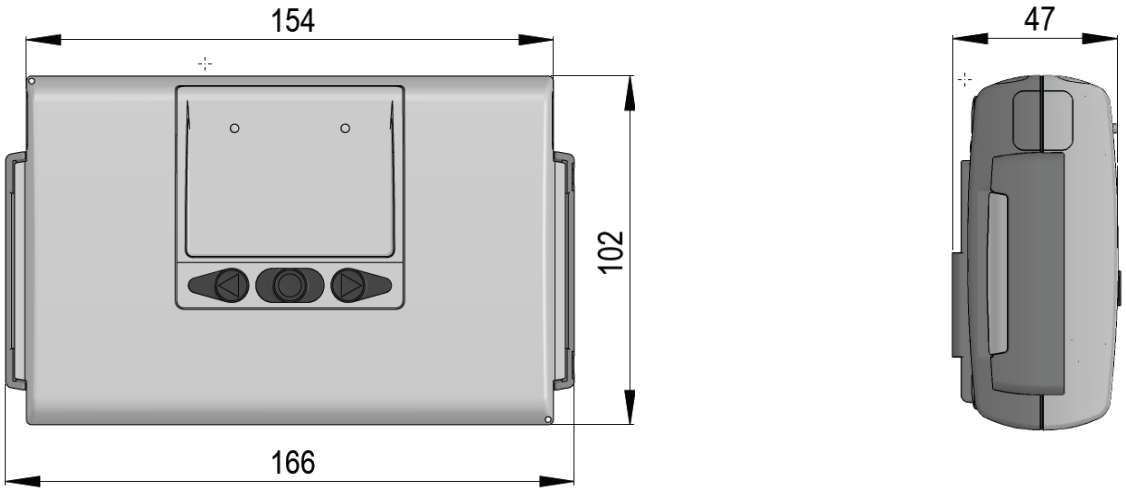

Figure 3: Mechanical measurements of MULTICAL® 603 calculator

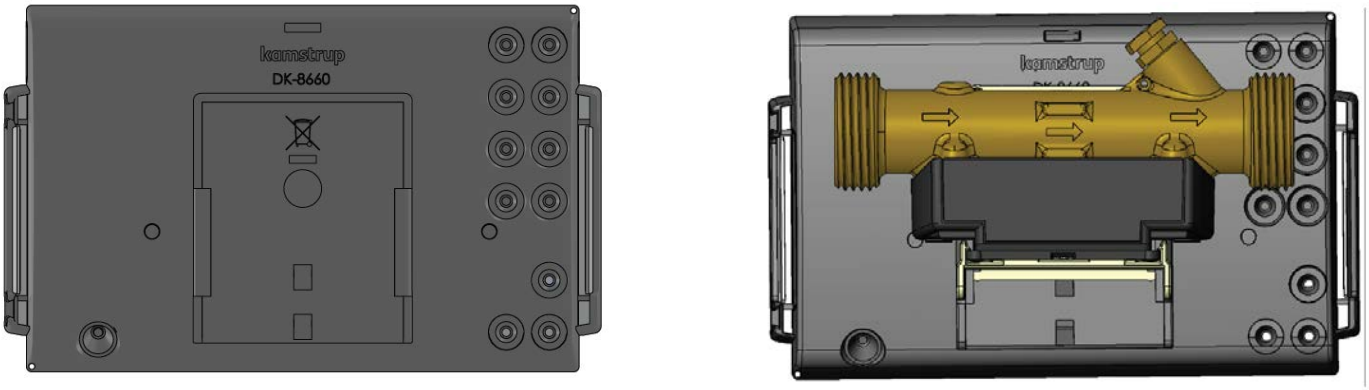

Figure 4: Calculator base separate and mounted on ULTRAFLOW®

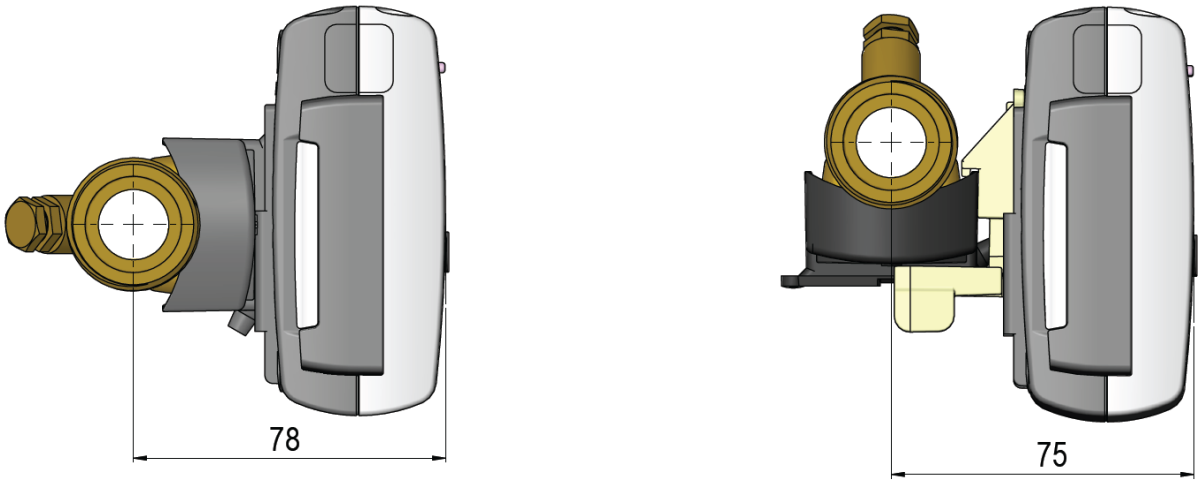

Figure 5: MULTICAL® 603 mounted on ULTRAFLOW® with G¾ threaded connection

6 Display

MULTICAL® 603 has a bright and clear display including 7 or 8 digits, depending on configuration, and a number of symbols for measuring units, info, inlet and outlet, radio on/off, etc. The display changes reading or is turned on when pressing on of the keys, which are placed on the meter's front. Furthermore, MULTICAL® 603 can be configured with light in the display, which automatically turns off 15 seconds after the latest activation of a key.

Depending on the selected integration mode (L-code), the display either switches off 4 minutes after the latest activation of a key or remains switched on. At the same time, it is possible to choose an integration mode in which the display's background light remains lit. Thus the selected integration mode influences the meter's battery lifetime. Read more about the battery lifetime in paragraph 10.3 and the meter's integration modes in paragraph 3.2.7.

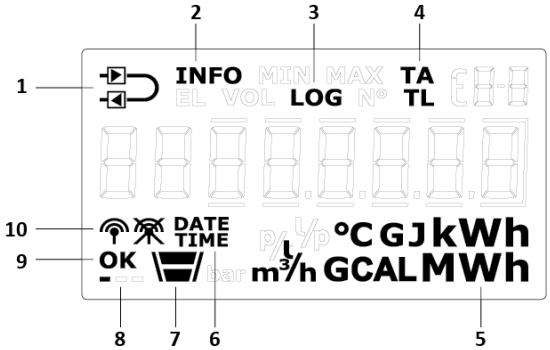

1	The meter is configured as inlet or outlet meter
2	Flashes at active info code
3	Active at historical readings
4	Tariff registers/tariff limits
5	Measuring unit

6	Date and time
7	Level indicator of menu loops
8	Heart beat indication shows that both meter and display are active
9	"OK" is displayed when a changed value has been saved
10	The meter's radio communication is switched on or off

The meter uses four different display loops. The four loops are intended for four different usage situations.

- USER loop
  The meter's configurable display loop is intended for the user. The readings in this loop can be adjusted to the utility company's requirements via the DDD-code. See paragraph 3.2.4 for an overview of possible readings in the meter's USER loop. The same paragraph includes examples of DDD-codes.
- TECH loop
  This loop is intended for technicians and is not configurable. The TECH loop contains all display readings, with the exception of logged values and the differential registers, and this loop is *not* configurable. The loop comprises readings such as serial number, date, time, config no., software revision and segment test. See paragraph 6.2 for a complete overview of the readings.
- SETUP loop
  SETUP loop is intended for the technician too. In this loop the technician can configure the meter via the front keys. In general (unless otherwise informed by the customer), the loop is open in transport state. When the meter for the first time registers a flow of 1 % of qp or larger, the access to the SETUP loop is blocked. From now on it is no longer possible to access SETUP loop unless you break the installation seal. See paragraph 6.3 for further details about the various parameters which can be configured in the SETUP loop, and see paragraph 7.8 for details on the meter's transport state.
- TEST loop
  Used by authorized laboratories for reverification of the meter. This loop is not available unless the meter's test seal (verification seal) is broken.

By means of the meter's front keys, you can choose from and switch between the four display loops. When delivered, the meter is in transport state, which means that the USER, TECH and SETUP loops are available. Depending on the country code, the access to the SETUP loop may be blocked in transport state, and the SETUP loop is thus not available on delivery. The TEST loop can only be accessed if the test seal (verification seal) is broken.

By keeping the primary key activated for 5 seconds, you navigate to LOOP select. Here, you can use the arrow keys to switch between the meter's display loops. In the TECH, SETUP and TEST loops, index numbers are used as the readings in these display loops are allocated to a specific index number. The index numbers facilitate navigation to the required reading. Index numbers are not used in the configurable USER loop. The below figure illustrates how it is possible to navigate in the meter's display by means of the front keys.

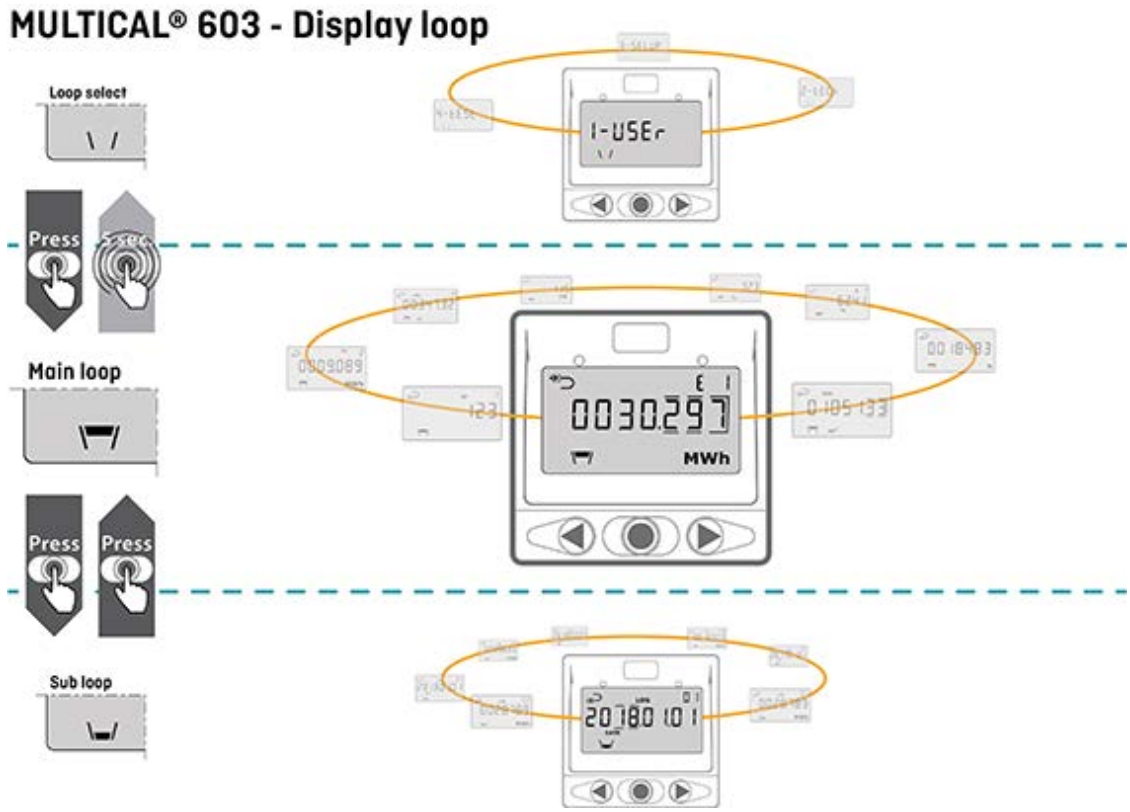

Readings in case of error

In order to facilitate the diagnostics work, lines are shown in the display readings (current values) which are influenced by the error, and at the same time, counting stops in the registers, which are depending on the given parameter and thus influenced by the error. In case of interrupted or short-circuited temperature sensor the corresponding display reading will include lines. MULTICAL® 603 registers these errors and sets an info code, which can easily be read from the display. Read more about info codes in paragraph 7.7.

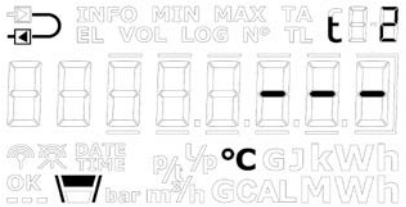

Reading of t2 in case of temperature sensor error

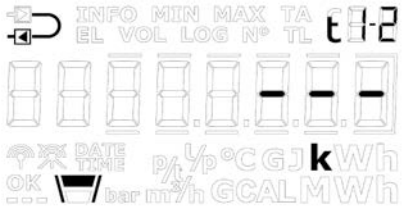

Reading of temperature difference t1-t2 at temperature sensor error

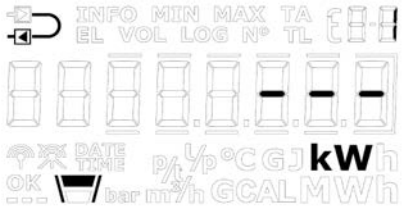

Error in power reading as a result of temperature sensor error

	t1 error	t2 error	t3 error	V1 Flow error	V2 Flow error
t1 inlet	Display - - -				
t2 outlet		Display - - -			
Δt (t1-t2)	Display - - -	Display - - -			
t3			Display - - -		
Flow, V1					
Power, V1	Display - - -	Display - - -			
E1	No counting	No counting			
E2	No counting	No counting			
E3	No counting	No counting			
E4	No counting		No counting		
E5		No counting	No counting		
E6			No counting		
E7	No counting		No counting		
E8	No counting				
E9		No counting			
E10			No counting		
E11			No counting		
V1					
V2					
A1	No counting	No counting			
A2	No counting	No counting			

Display reading in case of cut-off of flow

After a system cut-off, the current flow reading in MULTICAL® 603 will drop to 0 l/h during only a few seconds when a flow sensor with fast pulses such as ULTRAFLOW® is used.

When MULTICAL® 603 is connected to flow sensors with slow pulses, e.g. a reed switch, it will first indicate a decreasing current flow several minutes after the cut-off. MULTICAL® 603 automatically sets the flow reading to 0 l/h after 60 minutes without pulses.

For flow sensors with slow pulses, the flow reading will in general react slower and be less suitable for indicating low flows than when using flow sensors with fast pulses.

Heart beat and status indication

MULTICAL® 603 uses the three small display segments in the lower left corner of the display to indicate various status scenarios. Each segment will, depending on whether it is static or flashes, provide information about the given functionality in the meter. This is shown in the figure below:

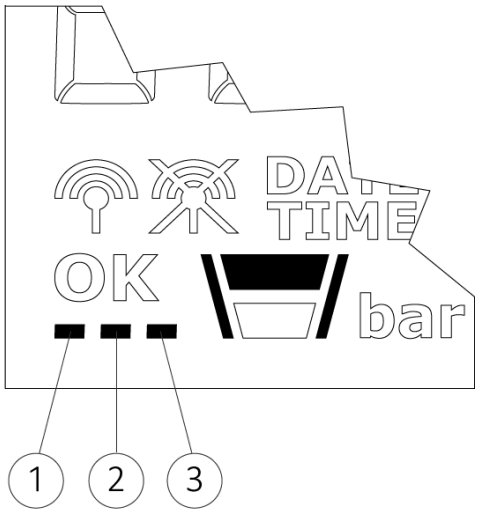

① Heart beat segment	**Flashes** - This segment always flashes as an indication that both the meter and display are active.
② SETUP and config segment	**Constantly lit** - The meter's config log is full, and it is therefore no longer possible to change the configuration. **Flashes** - It is possible to access the SETUP loop. The segment flashes as long as the meter is in transport state or 4 minutes after the calculator top and base have been separated. **Turned off** - It is not possible to access the SETUP loop or to configure the meter via METERTOOL HCW.
③ Optical interface segment[1]	**Constantly lit** - The meter's optical interface is deactivated, and optical communication is thus not possible. **Flashes** - The optical interface is temporarily active, flashes for 4 minutes after the calculator top and base have been separated. In this period of time, it is possible to activate the optical interface permanently. **Turned off** - The optical interface is active, and it is possible to communicate with the meter.

[1] The optical interface can be deactivated and activated via the optical readout head and METERTOOL HCW (see paragraph 14).

6.1 USER loop

The USER loop is the meter's primary loop, which includes the legal and most used readings. The loop is intended for the user and is configured according to the user's requirements via the DDD-code. See paragraph 3.2.4 for further information on the USER loop and DDD-codes.

Note: No display index numbers are used in the USER loop.

6.2 TECH loop

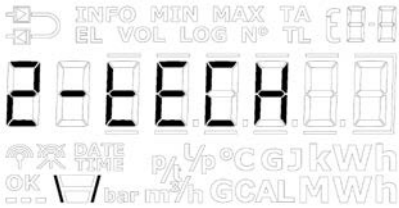

The TECH loop is intended for the technician, who is interested in viewing more readings than the ones available in the USER loop.

The TECH loop contains all display readings, with the exception of logged values and the differential registers, and this loop is *not* configurable. The module readings consist of a number of fixed readings and readings that depend on the mounted module.

The meter's TECH loop is shown below. You can switch forwards and backwards between the readings using the arrow keys, while a brief activation of the primary key switches between primary and secondary readings.

TECH loop				Display	
Primary reading		Secondary reading		Index number in display	Logging depth /reference number
1	Heat energy E1			2-001-00	
		1.1	Date of yearly logger	2-001-01	Log 01-02
		1.2	Data of yearly logger [1]	2-001-02	
		1.3	Date of monthly logger	2-001-03	Log 01-12
		1.4	Data of monthly logger [1]	2-001-04	
		1.5	E1 High-resolution		
2	Cooling energy E3			2-002-00	
		2.1	Date of yearly logger	2-002-01	Log 01-02
		2.2	Data of yearly logger [1]	2-002-02	
		2.3	Date of monthly logger	2-002-03	Log 01-12
		2.4	Data of monthly logger [1]	2-002-04	
		2.5	E3 High-resolution		

Primary reading		Secondary reading		Index number in display	Logging depth /reference number
3	Energy E2			2-003-00	
		3.1	Energy E4	2-003-01	
		3.2	Energy E5	2-003-02	
		3.3	Energy E6	2-003-03	
		3.4	Energy E7	2-003-04	
4	Volume V1			2-004-00	
		4.1	Mass V1	2-004-01	
		4.2	Pressure 1	2-004-02	
		4.3	Date of yearly logger	2-004-03	Log 01-02
		4.4	Data of yearly logger [1]	2-004-04	
		4.5	Date of monthly logger	2-004-05	Log 01-12
		4.6	Data of monthly logger [1]	2-004-06	
		4.7	V1 High-resolution		
5	Volume V2			2-005-00	
		5.1	Mass V2	2-005-01	
		5.2	Pressure 2	2-005-02	
		5.3	Date of yearly logger	2-005-03	Log 01-02
		5.4	Data of yearly logger [1]	2-005-04	
		5.5	Date of monthly logger	2-005-05	Log 01-12
		5.6	Data of monthly logger [1]	2-005-06	
6	Hour counter			2-006-00	
		6.1	Error hour counter	2-006-01	N° 60
7	t1 (Inlet)			2-007-00	
		7.1	Year-to-date average [2]	2-007-01	
		7.2	Month-to-date average [2]	2-007-02	
8	t2 (Outlet)			2-008-00	
		8.1	Year-to-date average [2]	2-008-01	
		8.2	Month-to-date average [2]	2-008-02	
9	Δt (t1-t2) cooling is indicated by -			2-009-00	
		9.1	E8 (V1·t1)	2-009-01	
		9.2	E9 (V1·t2)	2-009-02	
10	t3			2-010-00	
		10.1	E10 (V1·t3)	2-010-01	
		10.2	E11 (V2·t3)	2-010-02	

Primary reading		Secondary reading		Index number in display	Logging depth /reference number
11	t4 (programmed)			2-011-00	
12	Flow V1			2-012-00	
		12.1	Date of max this year [3]	2-012-01	
		12.2	Data of max this year [1]	2-012-02	
		12.3	Date of max this month [3]	2-012-03	
		12.4	Data of max this month [1]	2-012-04	
		12.5	Date of min. this year [3]	2-012-05	
		12.6	Data of min. this year [1]	2-012-06	
		12.7	Date of min. this month [3]	2-012-07	
		12.8	Data of min. this month [1]	2-012-08	
13	Flow V2			2-013-00	
14	Thermal output, V1			2-014-00	
		14.1	Date of max this year [3]	2-014-01	
		14.2	Data of max this year [1]	2-014-02	
		14.3	Date of max this month [3]	2-014-03	
		14.4	Data of max this month [1]	2-014-04	
		14.5	Date of min. this year [3]	2-014-05	
		14.6	Data of min. this year [1]	2-014-06	
		14.7	Date of min. this month [3]	2-014-07	
		14.8	Data of min. this month [1]	2-014-08	
15	Input A1 [4]			2-015-00	
		15.1	Meter no. of input A1	2-015-01	
		15.2	L/imp. of input A1	2-015-02	N° 65
		15.3	Date of yearly logger	2-015-03	Log 01-02
		15.4	Data of yearly logger [1]	2-015-04	
		15.5	Date of monthly logger	2-015-05	Log 01-12
		15.6	Data of monthly logger [1]	2-015-06	
16	Input B1 [4]			2-016-00	
		16.1	Meter no. of input B1	2-016-01	
		16.2	L/imp. of input B1	2-016-02	N° 67
		16.3	Date of yearly logger	2-016-03	Log 01-02
		16.4	Data of yearly logger [1]	2-016-04	
		16.5	Date of monthly logger	2-016-05	Log 01-12
		16.6	Data of monthly logger [1]	2-016-06	

Primary reading		Secondary reading		Index number in display	Logging depth /reference number
17	Input A2 [4]			2-017-00	
		17.1	Meter no. of input A2	2-017-01	
		17.2	L/imp. of input A2	2-017-02	N° 65
		17.3	Date of yearly logger	2-017-03	Log 01-02
		17.4	Data of yearly logger [1]	2-017-04	
		17.5	Date of monthly logger	2-017-05	Log 01-12
		17.6	Data of monthly logger [1]	2-017-06	
18	Input B2 [4]			2-018-00	
		18.1	Meter no. of input B2	2-018-01	
		18.2	L/imp. of input B2	2-018-02	N° 67
		18.3	Date of yearly logger	2-018-03	Log 01-02
		18.4	Data of yearly logger [1]	2-018-04	
		18.5	Date of monthly logger	2-018-05	Log 01-12
		18.6	Data of monthly logger [1]	2-018-06	
19	TA2			2-019-00	
		19.1	TL2	2-019-01	
20	TA3			2-020-00	
		20.1	TL3	2-020-01	
21	TA4			2-021-00	
			TL4	2-021-01	
22	A1 (A-) Heat discount			2-022-00	
		22.1	A2 (A+) Heat surcharge	2-022-01	
		22.2	t5	2-022-02	
23	CP			2-023-00	
			Current power of input B1 [5]	2-023-01	
			Averaging period of CP	2-023-02	
			Date of yearly logger	2-023-03	Log 01-02
			Data of yearly logger [1]	2-023-04	
			Date of monthly logger	2-023-05	Log 01-12
			Data of monthly logger [1]	2-023-06	
24	Info code			2-024-00	
		24.1	Info-event counter	2-024-01	
		24.2	Date for info logger	2-024-02	Log 01-50
		24.3	Data for info logger	2-024-03	

Primary reading		Secondary reading		Index number in display	Logging depth /refe-rence number
25	Customer number (First part)			2-025-00	Nº 1
		25.1	Customer number (Last part)	2-025-01	Nº 2
		25.2	Date	2-025-02	
		25.3	Time	2-025-03	
		25.4	Yearly target date 1	2-025-04	
		25.5	Monthly target date 1	2-025-05	
		25.6	Yearly target date 2	2-025-06	
		25.7	Monthly target date 2	2-025-07	
		25.8	Serial number	2-025-08	Nº 3
		25.9	Type number (dynamic) [9]	2-025-09	Nº 21
		25.10	Config 1 (ABCCCDDD)	2-025-10	Nº 5
		25.11	Config 2 (EEFFGGLM)	2-025-11	Nº 6
		25.12	Config 3 (NPPRRT)	2-025-12	Nº 7
		25.13	Config 4 (VVVV)	2-025-13	Nº 8
		25.14	Software revision	2-025-14	Nº 10
		25.15	Software checksum	2-025-15	Nº 11
		25.16	MID-004 certificate revision	2-025-16	Nº 12
		25.17	BEK-1178 certificate revision	2-025-17	Nº 13
		25.18	National certificate revision	2-025-18	Nº 14
		25.19	Averaging time of min./max P and Q	2-025-19	
		25.20	θ_{hc}	2-025-20	
		25.21	T offset	2-025-21	
		25.22	Pulse figure (Imp./l or l/imp.)	2-025-22	
		25.23	Nominal flow rate (qp)	2-025-23	
		25.24	Internal M-Bus primary address	2-025-24	Nº 34
		25.25	Segment test	2-025-25	
101	Info Module 1 Config no. [6]			2-101-00	Nº 31
		101.x	Firmware revision [7]	2-101-xx	Nº 32
		101.x	Module serial number [7]	2-101-xx	Nº 33
		101.x	Primary address [7]	2-101-xx	Nº 34 [8]
		101.x	M-Bus secondary addressing [7]	2-101-xx	Nº 35 [8]
		101.x	M-Bus enhanced secondary addres. [7]	2-101-xx	Nº 36 [8]
		101.x	KM-RF frequency [7]	2-101-xx	Nº 37
		101.x	KM-RF network address [7]	2-101-xx	Nº 38

Primary reading		Secondary reading		Index number in display	Logging depth /reference number
201	**Info Module 2** Config no. [6]			2-201-00	Nº 31
		201.x	Firmware revision [7]	2-201-xx	Nº 32
		201.x	Module serial number [7]	2-201-xx	Nº 33
		201.x	Primary address [7]	2-201-xx	Nº 34 [8]
		201.x	M-Bus secondary addressing [7]	2-201-xx	Nº 35 [8]
		201.x	M-Bus enhanced secondary addressing [7]	2-201-xx	Nº 36 [8]
		201.x	KM-RF frequency [7]	2-201-xx	Nº 37
		201.x	KM-RF network address [7]	2-201-xx	Nº 38

[1] Depending on the selected depth of yearly and monthly logs in the programmable data logger, these display readings can be empty.

[2] The temperature average is volume-based.

[3] Only the date of min./max is displayed in the format 20xx.xx.xx. By serial reading, the time (hh.mm) is included too.

[4] Inputs A1, B1, A2 and B2 are updated continuously in the display of MULTICAL® 603, i.e. the display of the connected water or electricity meter will be in accordance with the display of MULTICAL® 603 without delay.

[5] The unit of this reading is fixed at kW. The reading updates at the same speed as the integration interval, which is determined by the L-code.

[6] These are fixed readings under module info.

[7] These readings depend on the module and are thus not fixed readings. Depending on the module, the order of the readings can vary. Therefore, the index number is set to "xx".

[8] For module 60 - LON FT-X3, the reference numbers 34, 35 and 36 will be used for displaying the module's Neuron ID divided into three parts. The module's Neuron ID is displayed in decimal format on the display. The read values must be converted from decimal to hexadecimal for use in the LON-system.

[9] The module number in the dynamic type number is automatically updated when the module is replaced.

6.2.1 Module readings

The TECH loop includes a number of module readings which depend on the mounted module. These readings are described in the respective technical descriptions for the modules. Simple modules, however, only include the primary reading “Type/Config no.” (index number 2-101-00). If the meter is not fitted with a module, “Type/Config no.” is displayed as “00000000”.

Note: Module readings can be empty due to delay or interrupted communication between meter and module. The heart beat indication shows that both meter and display are active.

	Index number in display	Display reading	Display reference number
Type/Config no.	2-101-00 / 2-201-00	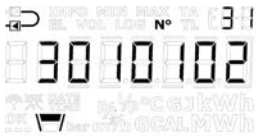	Nº 31
Firmware no./rev. Firmware 1357 C1	2-101-xx / 2-201-xx [1]		Nº 32
Module serial number No. 12345678	2-101-xx / 2-201-xx [1]	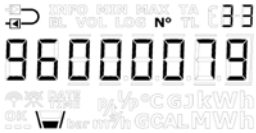	Nº 33
Primary address	2-101-xx / 2-201-xx [1]		Nº 34 [8]
M-Bus secondary ID	2-101-xx / 2-201-xx [1]	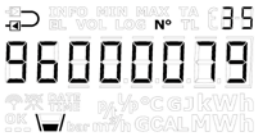	Nº 35 [8]
M-Bus enhanced secondary ID	2-101-xx / 2-201-xx [1]	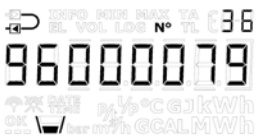	Nº 36 [8]

[1] These readings depend on the module and are thus not fixed readings. The order of the readings can vary. Therefore, the index number is set to “xx”. The reference number will, however, stay the same.

[8] For module 60 - LON FT-X3, the reference numbers 34, 35 and 36 will be used for displaying the module’s Neuron ID divided into three parts. The module’s Neuron ID is displayed in decimal format on the display. The read values must be converted from decimal to hexadecimal for use in the LON-system.

6.3 SETUP loop

In this loop, it is possible to configure the meter via the front keys. This enables the technician to configure the meter both before installation and when the meter has been put into operation. Configuration of the meter after commissioning requires that the installation seal is broken and that the meter top is separated from the meter base.

Please note that it is only possible to configure the meter 50 times via the SETUP loop. After 50 times, the meter is locked against further configuration, and total reset and reverification of the meter are required to regain access to the SETUP loop.

How to open the SETUP loop

1. In general (unless otherwise informed by the customer), the SETUP loop is available when the meter is in transport state. The meter leaves the transport state when the meter for the first time registers a flow of 1 % of qp or larger, or if the SETUP loop is ended via the menu item “EndSetup”. A total reset of the meter is the only way to return to transport state.

2. When the meter is in operation, i.e. the meter has left transport state, the SETUP loop can be accessed by breaking the meter’s installation seal and separating and reassembling the calculator top and the calculator base.

How to exit the SETUP loop

You can exit the SETUP loop in three ways. All three ways can be used both in transport state and after the meter has been put into operation.

1. Keep the primary key activated and navigate to the meter’s other loops.

2. After 4 minutes, the meter will reach time-out and return to the first reading in the USER loop.

3. Navigate to the menu item “EndSetup” in the SETUP loop, and keep the primary key activated for 5 seconds, while the frames around the reading increments, and the display in the end shows “OK”.
   Note: This locks the access to the SETUP loop, and thereby the meter is locked against further configuration. Subsequent reconfiguration of the meter requires that you break the installation seal.

IMPORTANT: “EndSetup” is an important function when the meter is in transport state, but when the meter is in operation, “EndSetup” is just one of three ways to exit the SETUP loop.

As it appears from the table above, the purpose of the menu item “EndSetup” is to enable the technician to lock the access to the SETUP loop in transport state and thus lock the meter against further configuration. This function is e.g. relevant to a technician who knows that a meter is to be mounted in the installation for some time before the first integration is carried out and wants to lock the access to the SETUP loop immediately after the installation to ensure that no further configuration is possible.

It also appears from the table below that no matter how the SETUP loop is closed when the meter is in operation, the installation seal must be broken again and the calculator top and base must be separated if the technician wants to regain access to the SETUP loop.

	Transport state	In operation
4. Primary key	✓ Access to the SETUP loop	✗ Access to the SETUP loop blocked
5. Timeout	✓ Access to the SETUP loop	✗ Access to the SETUP loop blocked
6. EndSetup	✗ Access to the SETUP loop blocked	✗ Access to the SETUP loop blocked

6.3.1 Change of parameters in the SETUP loop

You can navigate to the SETUP loop from the USER loop by activating the primary key for 5 seconds and then use the arrow keys to navigate to 3- SETUP that is accessed by pressing the primary key once. The SETUP loop does not include secondary readings, and therefore, the index number always consists of 4 digits, see table with SETUP parameters on the next page. The arrow keys are used for switching between the readings. In the SETUP loop, the primary key is used for accessing individual readings with the purpose of changing the parameter in question.

Pressing the primary key, the first digit of the parameter in question (the leftmost digit) starts flashing. The flashing digit can now be changed through brief activations of the primary key. Switch between the digits by pressing the arrow keys, move either to the right or to the left. When you have entered the required setup, activate the primary key until “OK” appears in the display. The meter has now saved the change and the display shows the set values.

Depending on the meter’s configuration, one or more menu items in the SETUP loop will be displayed as “Off”. This means that the function is not available in the meter, i.e. the function has been disabled during factory programming. If you try to access these readings via the primary key, the frames around “Off” becomes illuminated to indicate that this function is not available in the meter.

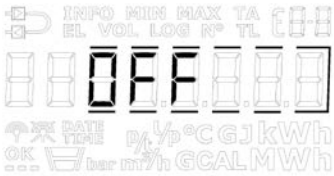

The table below shows the parameters that can be changed via the SETUP loop. Below the table, each parameter is explained.

SETUP loop		Index number in display
1	Customer number (Nº 1)	3-001
2	Customer number (Nº 2)	3-002
3	Date	3-003
4	Time [1]	3-004
5	Yearly target date 1 (MM.DD)	3-005
6	Monthly target date 1 (DD)	3-006
7	Flow sensor position: Inlet or outlet flow (A-code)	3-007
8	Energy unit (B-code) (Can be set to kWh, MWh, GJ and Gcal)	3-008
9	Primary address of internal M-Bus (Nº 34)	3-009
10	Primary address of module slot 1 (Nº 34)	3-010
11	Primary address of module slot 2 (Nº 34)	3-011
12	Averaging period of min./max P and Q	3-012
13	Heat/cooling shift (θ_{hc}) [2] (Only available in meter type 6)	3-013
14	Temperature sensor offset (t_{r0}) [3]	3-014
15	Radio on/off	3-015
16	Input A1 (preset register)	3-016
17	Input B1 (preset register)	3-017
18	Meter number of Input A1	3-018
19	Meter number of Input B1	3-019
20	TL2	3-020
21	TL3	3-021
22	TL4	3-022
23	Pre-setting t5	3-023
24	EndSetup	3-024

[1] In addition to adjusting the time via the SETUP loop, time and date can also be changed via METERTOOL HCW and the modules.

[2] θ_{hc} can only be changed in meters configured as meter type 6. In this meter type, you can both change θ_{hc} and disable the function. If you attempt to access this menu in meters configured as other meter types, the message "Off" is displayed.

[3] This function can have been disabled via the selected country code.

1. and 2. Customer no.

The customer number is a 16-digit figure distributed on two 8-digit menu items. The complete customer number can be adjusted via the two menu items in the SETUP loop.

3. Date

The meter's date can be adjusted in the SETUP loop. It is recommended to verify that the date was adjusted correctly, especially if time was adjusted too.

4. Time

The meter's time can be adjusted in the SETUP loop. It is recommended to verify that the time was adjusted correctly, especially if the date was adjusted too.

5. Yearly target date 1

The meter's yearly target date 1 can be adjusted in the SETUP loop. In MULTICAL® 603, it is possible to activate yearly target date 2. This function is switched off by default, i.e. set at 00.00. If yearly target date 2 is active in a meter we recommend that both yearly target dates are adjusted via METERTOOL HCW to ensure that they are correctly set with respect to each other. Note that the activation of yearly target date 2 influences the depth of the yearly log as the meter now makes two yearly loggings.

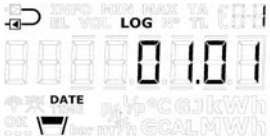

6. Monthly target date 1

The meter's yearly target date 1 can be adjusted in the SETUP loop. In MULTICAL® 603, it is possible to activate monthly target date 2. This function is switched off by default, i.e. set at 00. If monthly target date 2 is active in a meter we recommend that both monthly target dates are adjusted via METERTOOL HCW to ensure that they are correctly set with respect to each other. Note that the activation of monthly target date 2 influences the depth of the monthly log as the meter now makes two monthly loggings.

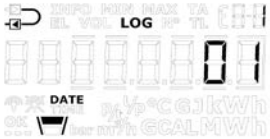

7. Flow sensor position: Inlet or outlet (A code)

The installation position of the flow sensor can be adjusted in the SETUP loop. This means that the meter can be changed from being an outlet meter to being an inlet meter and vice versa. A symbol in the top left corner of the meter's display shows whether the meter is configured as an inlet or an outlet meter.

8. Energy unit (B-code)

The meter's measuring unit (B-code) can be adjusted in the SETUP loop. It is thus possible to select if the meter's energy readings are to be shown in kWh, MWh, GJ or Gcal.

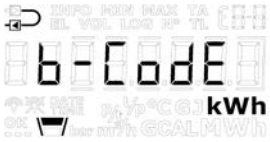

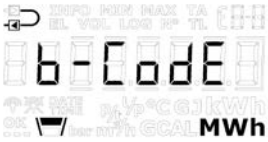

Note: The resolution of the energy unit always follows the one stated for the CCC-code with which a given MULTICAL® 603 is configured, see the CCC-tables in paragraph 3.2.3. Note that MULTICAL® 603 automatically switches to MWh if kWh is selected for MULTICAL® 603 with a CCC-code where kWh is not possible.

9. Primary address of internal M-Bus

It is possible to set the primary address of the internal M-Bus in MULTICAL® 603 in the SETUP loop. The address can be selected in the interval 0…250.

10. Primary address of module slot 1

It is possible to set the primary address of module slot 1 in MULTICAL® 603 in the SETUP loop. The address can be selected in the interval 0…250.

11. Primary address of module slot 2

It is possible to set the primary address of module slot 2 in MULTICAL® 603 in the SETUP loop. The address can be selected in the interval 0…250.

12. Averaging period of min/max P and Q

The averaging period used in the calculation of minimum and maximum values of power (P) and flow (Q) can be adjusted. The averaging period is indicated in the interval of 1…1440 minutes. Read more about the averaging period of min./max of P and Q in paragraph 7.5.

13. Heat/cooling shift (θ_{hc})

The limit for heat/cooling shift (θ_{hc}) can be adjusted in the SETUP loop, however only in meters ordered as meter type 6 (heat/cooling meter). The value can be selected in the interval 2…180.00 °C as well as at 250.00 °C if the user wants to disable the function. The function is enabled again by setting the limit at a value in the valid area of 2…180 °C. Heat/cooling shift is permanently disabled on other meter types, and the display thus shows “Off” on all other meter types than 6. Read more about heat/cooling shift in paragraph 7.4.

Meter type: 1, 2, 3, 4, 5, 7	Meter type: 6
The frames around “Off” illuminates as long as the primary key remains activated.	The first digit flashes and each digit can now be set at a value within the range 0…9. If you choose a value outside the valid interval (2…180.00 °C), the value is automatically adjusted to 250.00 °C, which indicates that the function has been switched off.

14. Temperature sensor offset (t_{r0})

Temperature sensor offset (t_{r0}) can be adjusted in the SETUP loop. Depending on the meter's configuration, this function can be disabled and the menu item will in that case display "Off".

Offset can be adjusted in the interval -0.99…0.99 K. By pressing the primary key, the 0 and the sign start flashing, and it is now possible to toggle between – and +, indicated in the display by the fact that the minus sign flashes and switches off respectively. By pressing the arrow keys, the meter shifts focus to the first decimal, i.e. it is not possible to change the value of the first digit as the valid interval is -0.99…0.99 K. Both the first and second decimal can be set to a value between 0 and 9. Read more about order data in paragraph 7.3.

Be aware of setting the required offset adjustment, not the error of the temperature sensor pair.
If the selected temperature sensor pair contributes with an error of -0.20 K, the meter's offset must be set at 0.20 K.

Note: The set offset is active for all temperature sensors that are connected to MULTICAL® 603, i.e. both t1, t2 and t3.

15. Radio on/off

The meter's radio/wireless communication can be adjusted to being switched on or switched off. The meter automatically turns on the radio when the meter leaves the transport state, i.e. when the meter has registered a flow of 1 % of q_p or larger. The radio on/off function in the SETUP loop is primarily used for switching on the radio in transport state, without the meter having registered flow, as well as for switching off the radio when the meter is dismounted after having been in operation, e.g. If the meter is to be sent by airfreight. The meter's present condition is indicated by two symbols in the bottom left corner of the display.

IMPORTANT:

- If the meter's radio communication is switched off via the SETUP loop, the meter will subsequently switch on the radio communication again when a flow of 1 % of qp or larger has been registered for the first time.
- The symbols for radio on/off indicate whether the meter allows radio communication, not whether a radio module has activated its radio communication. Please be aware of this when troubleshooting the meter's wireless communication.

The above definition of the radio on/off symbols simplify the use of radio on/off in the SETUP loop too as it is possible to switch between radio on/off whether a module is mounted in the meter or not. This provides flexibility as the utility can configure the meter prior to mounting a module and thus ensure that radio by default is either switched on or switched off when the module is subsequently mounted.

If there is not mounted a module in the meter, or if the mounted module is not a radio module, both symbols will be turned off in the other loops of the meter, regardless of the setting of radio on/off in the SETUP loop. MULTICAL® 603 always allows for radio communication during operation.

	Radio ON	Radio OFF	No module / not radio module
SETUP loop			
USER/TECH loop			

16. + 17. Inputs A1 and B1 (pre-setting of registers)

It is possible to pre-set the values of pulse inputs A1 and B1 in the SETUP loop so that the meter's display is in accordance with the connected water and/or electricity meters. The example is based on the connection of a water meter.

Note: If it is required to use the pulse inputs A2 and B2, METERTOOL HCW is used for pre-setting the registers.

18. + 19. Meter numbers of inputs A1 and B1

The meter numbers of the water and/or electricity meter connected to pulse inputs A1 and B1 can be adjusted in the SETUP loop. The example shows the meter number connected to pulse input B1.

Note: If it is required to use the pulse inputs A2 and B2, METERTOOL HCW is used for setting the meter numbers.

20. + 21. + 22. Tariff limits (TL2, TL3 and TL4)

The meter's three tariff limits can be adjusted in the SETUP loop. The tariff limits are only active if a tariff type has been selected during configuration of the meter, i.e. the EE-code differs from "00". The EE-code is shown in the TECH loop, see paragraph 6.2. If a tariff type has been selected, the menu points reflect this by displaying the correct tariff limit units. If no tariff type has been selected the menu points will be without units. Read more about tariff types in paragraph 3.2.5.

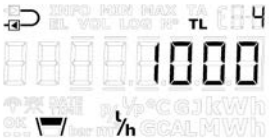

Note: It is <u>not</u> possible to have different types of tariff limits. The display readings shown are just examples.

23. Pre-setting t5

The temperature value t5 can be set in the interval 0.01…185.00 °C in the SETUP loop. This value is used in connection with the calculation of outlet energy registers, i.e. registers A1 (A-, heat at a discount) and A2 (A+, heat with an addition). Read more about this calculation and function in paragraph 7.1.3.

24. EndSetup

The menu item “EndSetup” enables the technician to lock the access to the SETUP loop in transport state and thus lock the meter against further configuration. To do so, the user must keep the primary key activated for 5 seconds. During the five seconds the frames around the reading EndSetup will currently become illuminated in the meter’s display. This action can be undone by releasing the primary key before the whole frame has become illuminated, i.e. before the 5 seconds have passed.

“EndSetup” is an important function when the meter is in transport state, but when the meter is in operation, “EndSetup” is just one of three ways to exit the SETUP loop. See paragraph 6.3.

6.4 TEST loop

The TEST loop is e.g. used by authorized laboratories for reverification of the meter.

Before the meter can enter the TEST loop and thus the TEST mode, the verification seal marked “TEST” on the meter’s verification cover must be carefully broken with a screwdriver and the contact points behind the seal be short-circuited. For this purpose, the short-circuit pen (6699-278) from Kamstrup A/S can be used.

It is recommended to complete the work in the TEST loop before starting the reconfiguration via the SETUP loop or METERTOOL as every reconfiguration is logged in MULTICAL® 603 (it is only possible to reconfigure MULTICAL® 603 50 times).

The meter leaves the TEST mode and returns to the first reading in the USER loop after 9 hours (time-out), or if the user keeps the primary key activated for 5 seconds.

TEST loop				Display
Main		Sub		Index number in display
1.0	High-resolution heat energy [1]			4-001-00
		1.1	*Heat energy (E1)*	4-001-01
2.0	High-resolution cooling energy [1]			4-002-00
		2.1	*Cooling energy (E3)*	4-002-01
3.0	High-resolution volume V1 [1]			4-003-00
		3.1	*Volume V1*	4-003-01
4.0	t1 (inlet)			4-004-00
5.0	t2 (outlet)			4-005-00
6.0	Flow V1			4-006-00

[1] *The resolution of the high-resolution registers appears from the table below.*

The registers can only be reset by a total reset of the meter.

	Normal resolution			
Resolution level	MWh Gcal	kWh	GJ	m^3 tons
3	0.0001	0.1	0.001	0.001
2	0.001	1	0.01	0.01
1	0.01	-	0.1	0.1
0	0.1	-	1	1

Table 1, Normal resolution

Flow sensor size	High resolution	
qp ≤ 1.5	*0.001 kWh*	*0.01 litre*
1.5 < qp ≤ 15	*0.01 kWh*	*0.1 litre*
15 < qp ≤ 150	*0.1 kWh*	*1 litre*
150 < qp ≤ 1500	*1 kWh*	*0.01 m^3*
1500 < qp ≤ 15000	*0.01 MWh*	*0.1 m^3*

Table 2, High resolution

	Energy	Volume
Normal resolution		
High resolution		

Table 3, Examples of normal and high resolution

While the meter is in TEST mode, all integrations are carried out at an interval of 2 seconds, irrespective of the chosen L-code.

The above high resolution registers can also be seen in the TECH loop, see paragraph 6.2. However, here the integration interval will follow the meter's usual interval, defined by the L-code.

While the meter is in TEST mode, high-resolution pulses can be generated for test purposes via Pulse interface (see paragraph 13).

7 Calculator functions

7.1 Application types and energy calculations

MULTICAL® 603 operates with 15 different energy formulas, E1, E2, E3, E4, E5, E6, E7, E8, E9, E10, E11, A1, A2, dE(ΔE) and cE, which are all calculated parallel with each integration, irrespective of how the meter is configured. E8 and E9 are used as a basis of the calculation of average temperatures of inlet and outlet, whereas E1 and E3 are used for heat and cooling measurement, respectively. E4 to E7 are used in a number of energy applications that are shown below. A1 and A2 are used as a basis for discount/surcharge based on the outlet temperature (see paragraph 7.1.3).

Formula	ΔΘ	Example of application	Included in application no.	Register type
E1=V1(t1-t2)k $_{t1: Inlet / t2: Outlet}$	t1 > t2	Heat energy (V1 in inlet or outlet)	1+2+3+4+5+6+8+10	**Legal** Display/Data/Log
E2=V2(t1-t2)k $_{t2: Outlet}$	t1 > t2	Heat energy (V2 in return)	2+7	Display/Data/Log
E3=V1(t2-t1)k $_{t2: Inlet / t1: Outlet}$	t2 > t1	Cooling energy (V1 in inlet or outlet)	1+11	**Legal** Display/Data/Log
E4=V1(t1-t3)k $_{t1}$	t1 > t3	Forward energy	7+9+11	Display/Data/Log
E5=V2(t2-t3)k $_{t2}$	t2 > t3	Outlet energy or tap from outlet	5+7+9	Display/Data/Log
E6=V2(t3-t4)k $_{t3}$	t3 > t4	Tap water energy, separate	3+6	Display/Data/Log
E7=V2(t1-t3)k $_{t3}$	t1 > t3	Return energy or tap from flow	4+8	Display/Data/Log
E8=V1[m^3] x t1	-	Average temperature in inlet	See paragraph 7.1.2.	Display/Data/Log
E9=V1[m^3] x t2	-	Average temperature in outlet		Display/Data/Log
E10=V1[m^3] x t3	-	Average t3 in V1		Display/Data/Log
E11=V2[m^3] x t3	-	Average t3 in V2		Display/Data/Log
Additional registers				
A1	t5 > t2	Heat energy at a discount	See paragraph 7.1.3.	Display/Data/Log
A2	t2 > t5	Heat energy with an addition		Display/Data/Log
dE(ΔE)=E4-E5	-	Differential energy	7	-
cE=E5-E4	-	Control of differential energy	7	-

7.1.1 Approvals for energy and applications

The symbols in the following table are used for specifying whether an energy calculation in a given application has been approved and for showing which approval is valid.

Symbol	Approval
❷	MID 2014/32/EU – Heat meter (EU)
❺	TS 27.02 – Cooling meter (EU)

Symbols used in application figures

†	Temperature sensor	⋈	Stop valve	000 Σ m³	Flow sensor
000 Σ kWh	Calculator	◯	Consumer, e.g. radiators	↘	Non-return valve
▏	Heat exchanger				

7.1.2 Components used in applications

The table below shows which components are necessary in the individual applications.

Application	Energy	System type		Flow sensor		Temperature sensors			
		Closed	Open	V1	V2	t1	t2	t3	t4
1	E1-E3	●		●		●	●		
2	E1-E2	●		●	●	●	●	◌	
3	E1-E6	●	●	●	●	●	●	◌	◌
4	E1-E7	●		●	●	●	●	◌	
5	E1-E5		●	●	●	●	●	◌	
6	E1-E6		●	●	●	●	●	◌	◌
7	E2-E4-E5-dE(ΔE)		●	●	●	●	●	◌	
8	E1-E7		●	●	●	●	●	●	
9	E4-E5	●		●	●	●	●	●	
10	E1		●	●		●	◌		
11	E3-E4	●		●		●	●	●	

7.1.3 Application drawings

Energy types E1…E16 are described by application examples below.

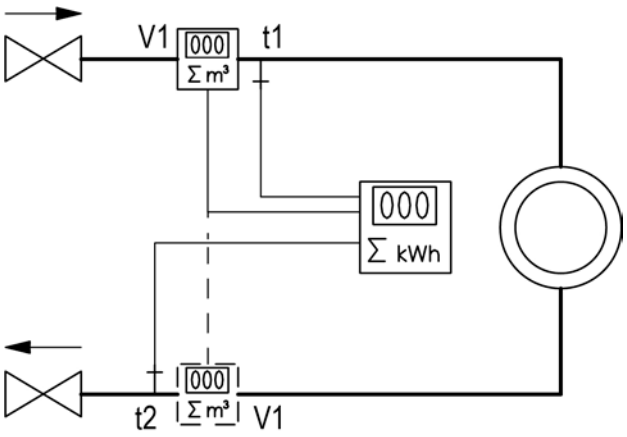	<u>Application no. 1</u> **Closed thermal system with 1 flow sensor** ❷ Heat energy: E1 = V1(t1-t2)k $_{t1:inlet\ or\ t2:outlet}$ ❺ Cooling energy: E3 = V1 (t2-t1)k $_{t1:inlet\ or\ t2:outlet}$ Flow sensor V1 is mounted in inlet or outlet as selected during configuration. Mass: M1 = V1 (Kmass t1) or Mass: M1 = V1 (Kmass t2) depending on inlet/outlet programming. Config A = 3 (inlet) or 4 (outlet)
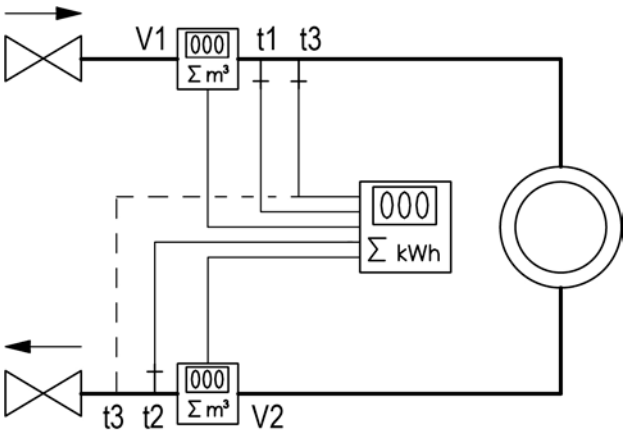	<u>Application no. 2</u> **Closed thermal system with 2 identical flow sensors** **Leakage monitoring and Permanent operational monitoring** ❷ Billing energy: E1 = V1(t1-t2)k $_{t1:Inlet}$ Control energy: E2 = V2 (t1-t2)k $_{t2:Outlet}$ t3 can be used for check measurement of either the inlet or outlet temperature, but t3 is not used for the energy calculation. Mass: M1 = V1 (Kmass t1) Mass: M2 = V2 (Kmass t2) Config. A = 3 (Inlet)

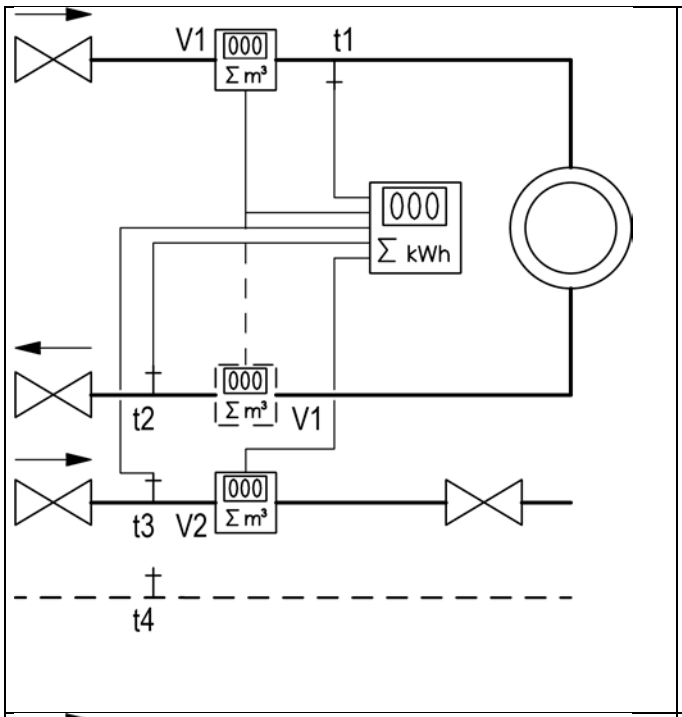

Application no. 3

2 string system with 2 flow sensors

❷ Heat energy: E1 = V1(t1-t2)k $_{t1:inlet\ or\ t2:outlet}$

Tap water energy: E6 = V2 (t3-t4)k $_{t3}$

t3 is measured or programmed
t4 is programmed.

Flow sensor V1 is mounted in inlet or outlet as selected during configuration.

Mass: M1 = V1 (Kmass t1) or
Mass: M1 = V1 (Kmass t2) depending on inlet/outlet programming.
Mass: M2 = V2 (Kmass t3)*

Config A = 3 (inlet) or 4 (outlet)

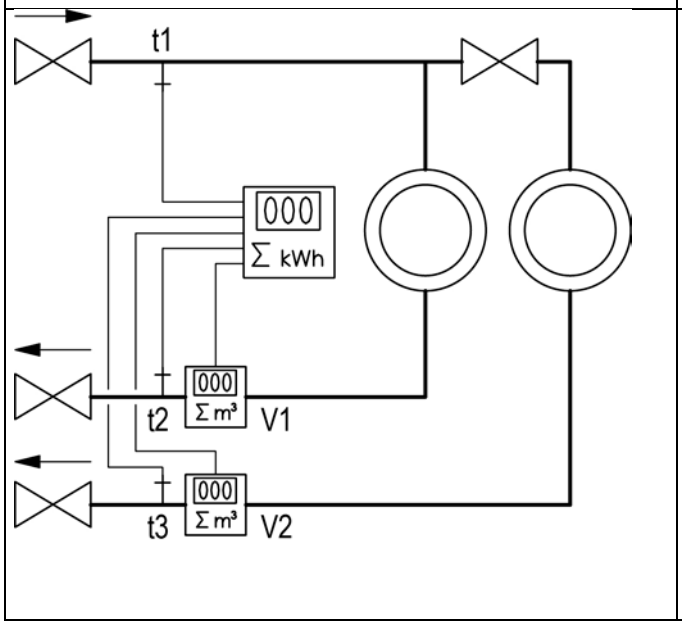

Application no. 4

2 heating circuits with joint forward pipe

❷ Heat energy #1: E1 = V1(t1-t2)k $_{t2}$

Heat energy #2: E7 = V2(t1-t3)k $_{t3}$

t3 is measured or programmed

Mass: M1 = V1 (Kmass t2)
Mass: M2 = V2 (Kmass t3)*

Config. A = 4 (outlet)

** M2 = V2 (Kmass t3). V2 is mass-adjusted with t3 when selecting special DDD-code.*

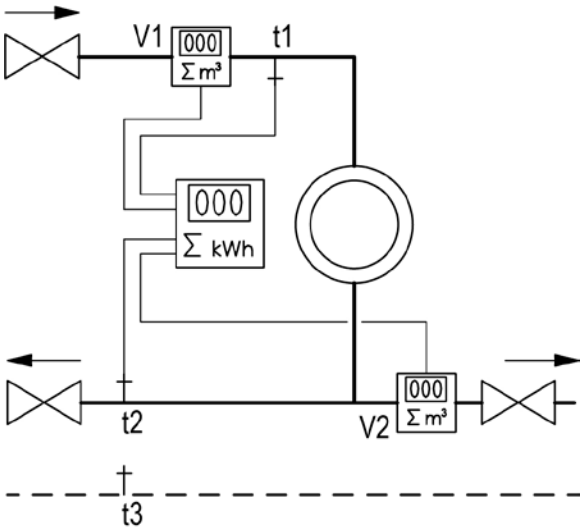	<u>Application no. 5</u> **Open system with tapping from return pipe** Heat energy: E1 = V1(t1-t2)k_{t1} Tap water energy: E5 = V2 (t2-t3)k_{t2} t3 is measured or programmed Mass: M1 = V1 (Kmass t1) Mass: M2 = V2 (Kmass t2) Config. A = 3 (Inlet)
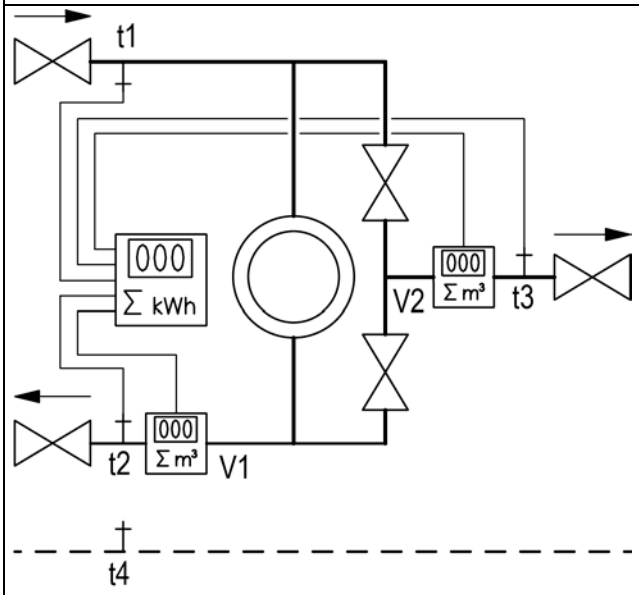	<u>Application no. 6</u> **Open system with separate flow sensor for tapping** Heat energy: E1 = V1(t1-t2)k_{t2} Tap water energy: E6 = V2 (t3-t4)k_{t3} t3 is measured or programmed t4 is programmed. Mass: M1 = V1 (Kmass t2) Mass: M2 = V2 (Kmass t3)* Config. A = 4 (outlet)

* M2 = V2 (Kmass t3). V2 is mass-adjusted with t3 when selecting special DDD-code.

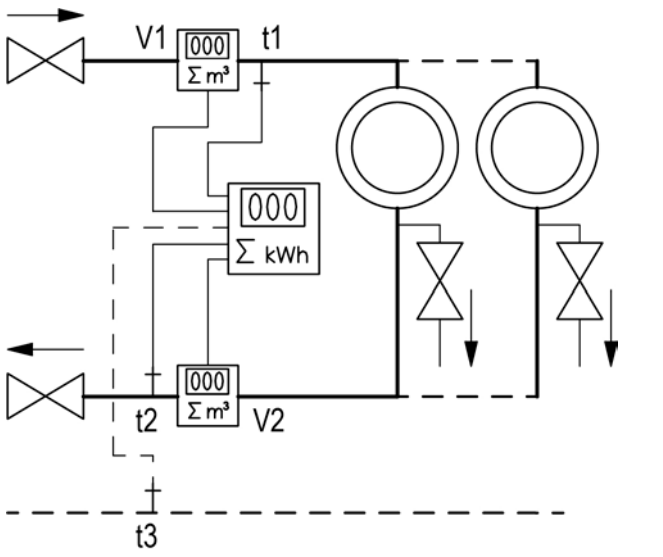

Application no. 7

Open system with 2 flow sensors

Forward energy: E4 = V1 (t1-t3)k_{t1}

Return energy: E5 = V2 (t2-t3)k_{t2}

dE(ΔE) = E4-E5 can be calculated by the meter.

Heat energy: E2 = V2 (t1-t2)k_{t2}

t3 is measured or programmed

Mass: M1 = V1 (Kmass t1)
Mass: M2 = V2 (Kmass t2)

Config A = 3 (inlet) or 4 (outlet)
No influence on E2, E4 or E5

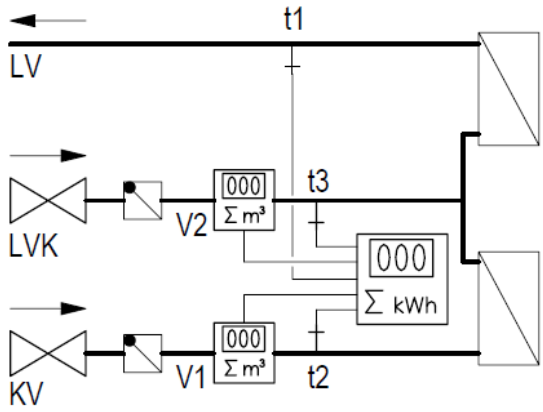

Application no. 8

Hot-water boiler with circulation

Total consumption E1 = V1 (t1-t2)k_{t2}

Circulated consumption: E7 = V2 (t1-t3)k_{t3}

Mass: M1 = V1 (Kmass t2)
Mass: M2 = V2 (Kmass t3)*

LV: Hot domestic water
LVK: Heat circulation
KV: Cold water

Config. A = 4 (outlet)

** M2 = V2 (Kmass t3). V2 is mass-adjusted with t3 when selecting special DDD-code.*

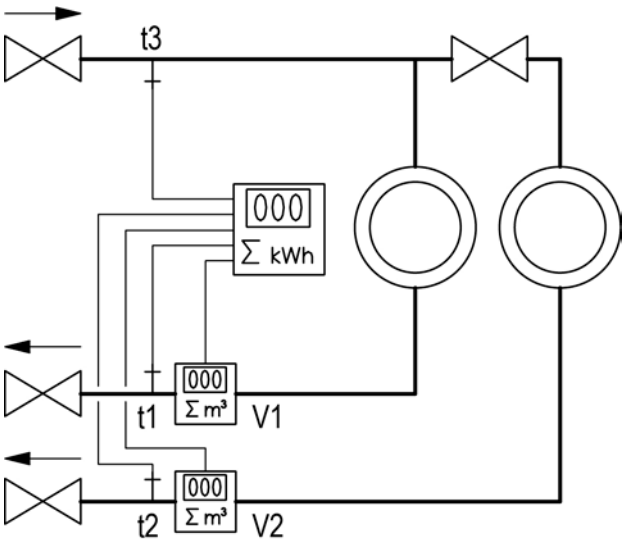

Application no. 9

2 cooling circuits with joint forward pipe

Cooling energy #1: E4 = V1(t1-t3)k_{t1}

Cooling energy #2: E5 = V2(t2-t3)k_{t2}

Mass: M1 = V1 (Kmass t1)
Mass: M2 = V2 (Kmass t2)

Config A = 3 (inlet) or 4 (outlet)
No influence on E2, E4 or E5

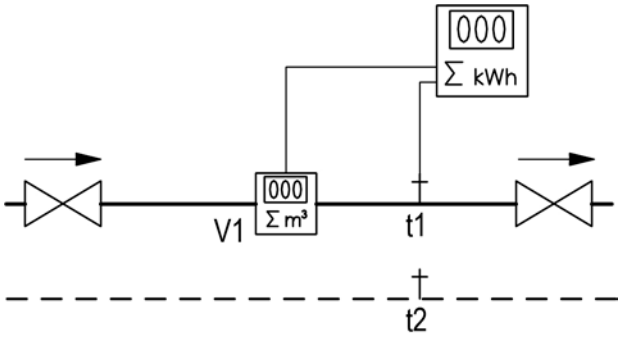

Application no. 10

Energy of domestic hot water

Tap water energy: E1 = V1 (t1-t2)k t_1

Mass: M1 = V1 (Kmass t1)

t1 and t2 are measured with 2-wire sensors or 4-wire sensors.

Alternative:
t2 is programmed with a fixed temperature value or t2 is programmed via the scheduler function that is built into MULTICAL® 603. The temperature t2 follows a table, within which t2 can be changed up to 12 times a year.

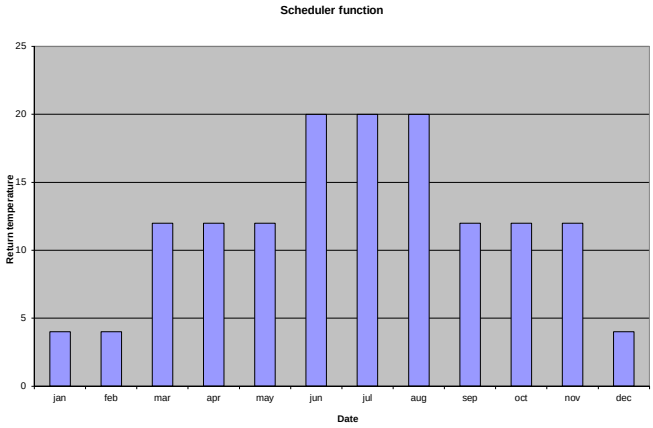

Config. A = 3 (Inlet)

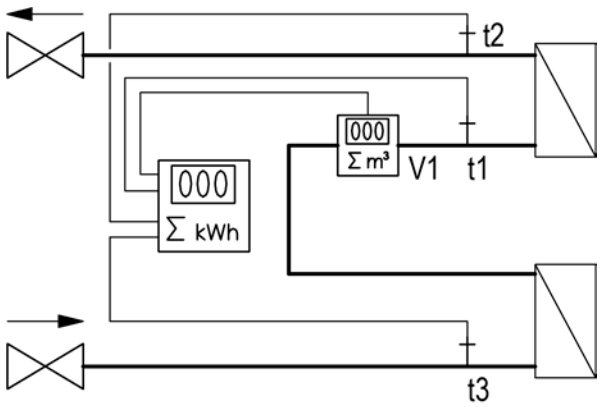

<u>Application no. 11</u>

2-stage boiler system with 1 flow sensor

Boiler energy "B": E3 = V1 (t2-t1)k_{t1}
(Upper boiler)

Boiler energy "A": E4 = V1(t1-t3)k_{t1}
(Lower boiler)

Config. A = 4 (outlet)

7.1.4 Energy calculations and registers E1 and E3

MULTICAL® 603 calculates energy on the basis of the formula stated in EN 1434-1, which uses the international temperature scale issued in 1990 (ITS-90) and the pressure definition of 16 bar.

In a simplified form the energy calculation can be expressed as: Energy = V x ΔΘ x k. The calculator always calculates energy in [Wh], and then converts the value to the selected measuring unit.

E [Wh] =	V x ΔΘ x k x 1000
E [kWh] =	E [Wh] / 1,000
E [MWh] =	E [Wh] / 1,000,000
E [GJ] =	E [Wh] / 277,800

V is the added (or simulated) water volume in m^3

ΔΘ is the measured temperature difference: Heat energy (E1) ΔΘ = inlet temperature less outlet temperature
Cooling energy (E3) ΔΘ = outlet temperature less inlet temperature

Both in the display and during data reading each energy type is uniquely defined, e.g.

Heat energy: E1 = V1(t1-t2)k

Cooling energy: E3 = V1(t2-t1)k

k is the heat coefficient of water, calculated according to the formula of EN 1434 and OIML R75-1:2002.

Kamstrup A/S can supply an energy calculator for check measurement:

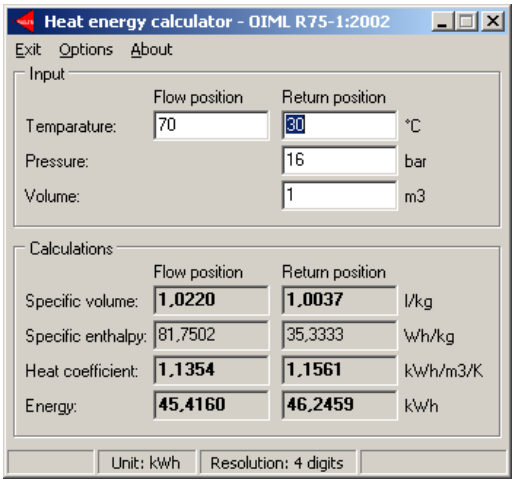

		Calculation	Condition
<u>Heat energy</u> (E1, A1, A2)	Inlet	$E1 = m^3x(t1-t2)k_{t1}$ $A1 = m^3x(t5-t2)k_{t1}$ $A2 = m^3x(t2-t5)k_{t1}$	t1 > t2 If t1 = t2, then E1, A1, A2 = 0 If t5-t2 ≤ 0, then A1 = 0 If t2-t5 ≤ 0, then A2 = 0 $\theta_{t1} > \theta_{hc}$ *(meter type 6)*
	Outlet	$E1 = m^3x(t1- t2)k_{t2}$ $A1 = m^3x(t5-t2)k_{t2}$ $A2 = m^3x(t2-t5)k_{t2}$	t1 > t2 If t1 = t2, then E1, A1, A2 = 0 If t5-t2 ≤ 0, then A1 = 0 If t2-t5 ≤ 0, then A2 = 0 $\theta_{t1} > \theta_{hc}$ *(meter type 6)*
<u>Cooling energy</u> (E3)	Inlet	$E3 = m^3x(t2- t1)k_{t1}$	t1 < t2 $\theta_{t1} > \theta_{hc}$ *(meter type 6)*
	Outlet	$E3 = m^3x(t2 – t1)k_{t2}$	t1 < t2 $\theta_{t1} > \theta_{hc}$ *(meter type 6)*
<u>Inlet/outlet energy</u> (E8, E9, E10, E11)		$E8 = V1[m^3] \times t1$ $E9 = V1[m^3] \times t2$ $E10 = V1[m^3] \times t3$ $E11 = V2[m^3] \times t3$	

In case of an error on temperature sensor t1, t2 or t3, the counting stops in the registers, which are influenced by the error. Furthermore, the displayed reading in question will include lines.

	t1 error	t2 error	t3 error	V1 Flow error	V2 Flow error
t1 inlet	Display - - -				
t2 outlet		Display - - -			
Δt (t1-t2)	Display - - -	Display - - -			
t3			Display - - -		
Flow, V1					
Power, V1	Display - - -	Display - - -			
E1	No counting	No counting			
E2	No counting	No counting			
E3	No counting	No counting			
E4	No counting		No counting		
E5		No counting	No counting		
E6			No counting		
E7	No counting		No counting		
E8	No counting				
E9		No counting			
E10			No counting		
E11			No counting		
V1					
V2					
A1	No counting	No counting			
A2	No counting	No counting			

7.1.5 Energy calculations and registers E8, E9, E10 and E11

E8 and E9 are used as a basis for calculating the volume-based average temperatures of inlet and outlet respectively. With every integration, the registers are accumulated by the product of m^3 x °C, which makes E8 and E9 a suitable basis for the calculation of volume-based average inlet and outlet temperatures.

E10 and E11 function in the same way as E8 and E9, but are used for calculating the average t3 in either V1 or V2.

E8, E9, E10 and E11 can be used for the average calculation during any period of time as long as the volume register is read at the same time as the energy registers.

E8= V1[m^3] x t1

E8 is increased by the product of m^3 for V1 x t1

E9 = V1[m^3] x t2

E9 is increased by the product of m^3 for V1 x t2

E10 = V1[m^3] x t3

E11 is increased by the product of m^3 for V1 x t3

E11 = V2[m^3] x t3

E11 is increased by the product of m^3 for V2 x t3

Resolution of E8, E9, E10 and E11

E8, E9, E10 and E11 depend on the volume resolution [m^3]

Volume resolution	E8, E9, E10 and E11 resolutions
0000.001 m^3	m^3 x °C x 10
00000.01 m^3	m^3 x °C
000000.1 m^3	m^3 x °C x 0.1
0000001 m^3	m^3 x °C x 0.01

Example 1: Within a year a heating installation has used 250.00 m^3 district heating water and the average temperatures have been 95 °C in inlet and 45 °C in outlet.
E8 = 23750 and E9 = 11250.

Example 2: The average temperatures are to be measured together with the yearly reading. Therefore, E8 and E9 are included in the yearly reading.

Reading date	Volume	E8	Average of inlet	E9	Average of outlet
2017.06.01	534.26 m^3	48236		18654	
2016.06.01	236.87 m^3	20123		7651	
Yearly consumption	297.39 m^3	28113	28113/297.39 = 94.53 °C	11003	11003/297.39 = 36.99 °C

Table 4

7.1.6 Outlet energy registers A1 and A2

The function behind the "Outlet energy registers" is that A1 accumulates heat energy consumed with low outlet temperature for which the customer receives a discount, and A2 accumulates heat energy consumed with high outlet temperature for which the consumer receives a surcharge.

The energy calculations of a heat meter with flow sensor in outlet are shown below:

$A1 = m^3 \times (t5-t2)k_{t2}$ Heat energy with discount

$A2 = m^3 \times (t2-t5)k_{t2}$ Heat energy with surcharge

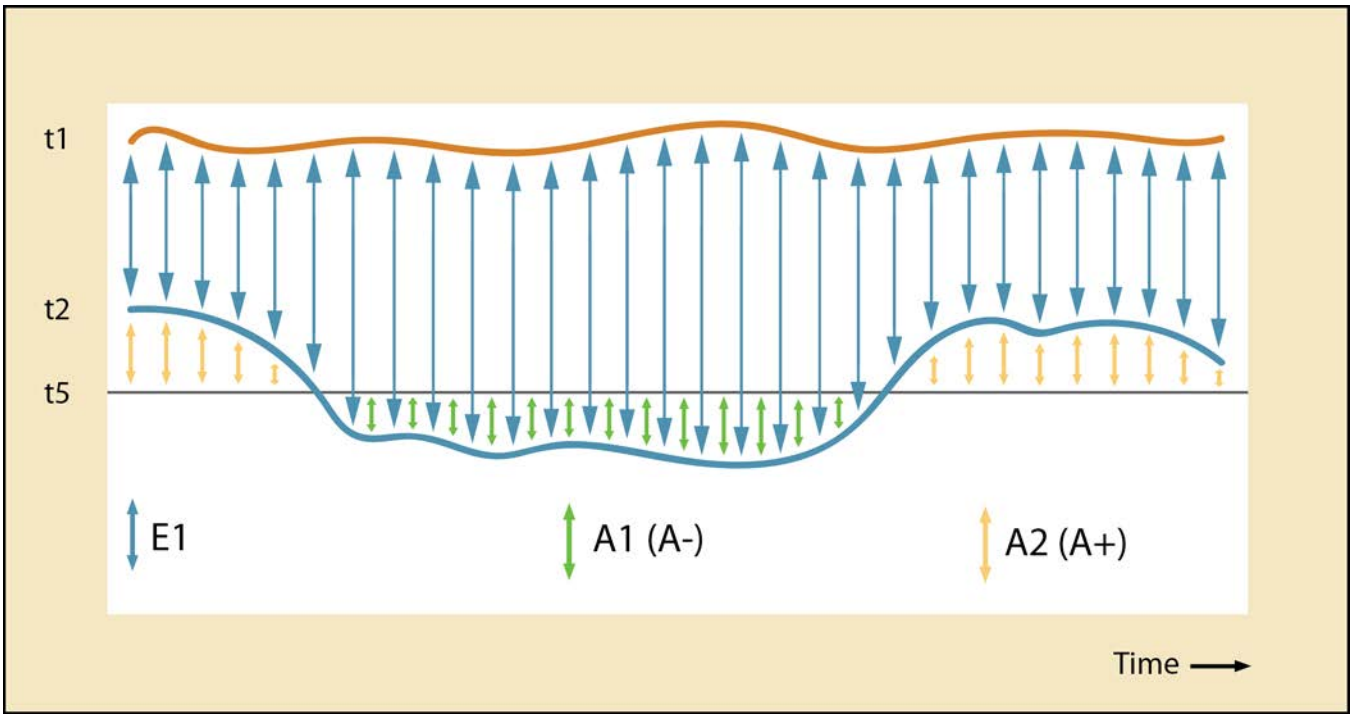

The outlet temperature reference t5 can be factory-configured as required, or can be changed via METERTOOL HCW after delivery. Typical configuration is t5 = 50 °C.

Symbol	Explanation	Measuring unit
t1	Inlet temperature	[°C]
t2	Outlet temperature	
t5	Outlet temperature reference	
E1	Total heat energy	[kWh], [MWh], [GJ], [Gcal]
A1	Heat energy at a discount	
A2	Heat energy with an addition	

As the accuracy of the absolute temperature has direct influence on the accuracy of outlet energy registers A1 and A2, the zero error of the sensor pair and the influence from the sensors' connection cable ought to be compensated via the offset adjustment of MULTICAL® 603 (see paragraph 7.3).

7.2 Measurement of a heat pump's coefficient of performance

7.2.1 Coefficient of Performance (CP)

In houses with heat pumps, with a common heat circuit, it is appropriate to measure both the released thermal energy and the gained electrical energy, based on which the coefficient of performance (COP or CP) can be calculated. CP is the abbreviation of “Coefficient Of Performance”.

The calculation is based on simple proportional numbers between the calculated thermal energy (E1) and the electrical energy, which is measured via pulse input B (In-B1):

$$CP = \frac{Thermal\ energy\ [E1]}{Elekcric\ energy\ [Input\ B1]}$$

The electrical energy (In-B1) is always registered in kWh or MWh, whereas the thermal energy (E1) is either registered in kWh, MWh, Gcal or GJ depending on the selected B-code. No matter which unit you choose, the meter calculates CP correctly. The CP value is displayed with one decimal and is a value in the interval 0.0…19.9.

The CP value can be displayed, respectively, as a current value, a monthly value or a yearly value (SCOP, Seasonal Coefficient Of Performance). In addition, the averaging period of the current CP value as well as the current power measured at pulse input B1 can be displayed.

Current CP is averaged over a number of days and nights selected in the meter’s configuration. The averaging period can be selected in the interval 5…30 days and nights. The averaging period is set at 7 days and nights, unless otherwise stated by the customer.

Note: If data of E1 or In-B1 is missing for a logging period, the current CP is displayed as 0.0 until the data basis is sufficient.

CP display readings

The table below shows the CP readings in the TECH loop.

Primary reading	*Secondary reading*	*Display no.*	*Display reading*
CP (moving average)		2-023-00	
	Current power of In-B1	2-023-01	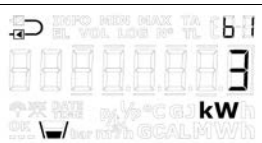
	Averaging period of CP	2-023-02	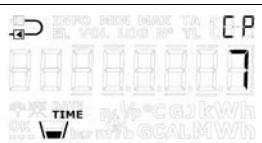
	Yearly date	2-023-03	

	Yearly data	2-023-04	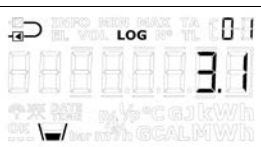
	Monthly date	2-023-05	
	Monthly data	2-023-06	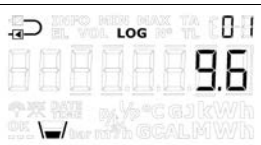

Reset of CP

Situation	Handling
Different units and/or resolutions of E1 and In-B1	Correction for the difference in CP calculation
Reconfiguration of unit and/or resolution of E1 (the B- or CCC-code)	Reset of CP calculations [1]
Reconfiguration of unit and/or resolution of In-B1 (the GG-code)	Reset of CP calculations [1]
Reconfiguration of pre-setting of In-B1	Reset of CP calculations [1]

[1] Monthly and yearly CP restart, i.e. CP is calculated over just the remaining period until the next logging. Current CP is set to 0.0 until the daily log has logged over the configured number of days (if number of days, for example, is set to 5, the meter cannot make a calculation over 5 days until it has carried out 6).

7.2.2 Seasonal Coefficient of Performance (SCOP)

SCOP is an average measurement of the heat pump's coefficient of performance, which indicates how efficient it is on a yearly basis. The average yearly value is measured over a year (one season) in which the heat pump has experienced both high and low ambient temperatures.

By selecting logger profile (RR-code), it is possible to save both yearly and monthly values. The monthly values are calculated as the average of a full month, and the yearly values are calculated as the average of a full year. Month and year are determined by the selected target date.

7.2.3 Measurement of the coefficient of performance (CP) of a gas boiler

If the pulse output of a gas meter is connected to a heat meter, the coefficient of performance of the gas boiler can be measured, in terms of e.g. kWh/Nm^3 gas. A volume resolution which corresponds to the pulse weighting on the gas meter pulse output must then be selected for input B1.

7.3 Offset adjustment of temperature sensor measurement

MULTICAL® 603 is available with possible offset adjustment of the temperature sensor measurement, thus increasing the accuracy of the absolute temperature measurement. This is especially relevant in the installation scenario that the meter is to be used for tariff billing based on absolute temperatures. In that case, it is an EN1434 requirement that the accuracy of the meter's absolute temperature reading must be within ± 1.0 K. Offset adjustment is extremely relevant in district cooling installations too. In district cooling installations the customer often requires a maximum inlet temperature. Absolute temperature measurement measuring with undesirable inaccuracy can cause the supplier to supply water with a lower inlet temperature than promised, resulting in unnecessary extra costs for the supplier.

Depending on the meter's configuration, the offset adjustment can be programmed into the meter from the factory. In addition, offset can be adjusted after delivery via the meter's SETUP loop (see paragraph 6.3) or via METERTOOL HCW (see paragraph 14).

Note: Depending on the meter's configuration, the offset adjustment can be disabled, and in this case, the menu item in the SETUP loop will display "Off".

If the temperature sensor pair of a meter with offset adjustment is replaced, it is recommended to correct the offset to match the newly connected sensor pair. Alternatively, offset should be adjusted to 0.00 K, which means that the function is switched off and does not contribute to an undesirable increase of the error of the absolute temperature measurements. Note that the offset adjustment influences connected temperature sensors on both t1, t2 and t3.

Temperature sensor offset (t_{r0}) can be adjusted in the interval -0.99…0.99 K according to the meter's approval.

Please be aware that the required offset adjustment must be entered, not the error of the temperature sensor pair. If the selected temperature sensor pair contributes with an error of -0.20 K, the meter's offset must be set at 0.20 K.

7.4 Combined heat/cooling metering

MULTICAL® 603 is available as heat meter (meter type 2), cooling meter (meter type 5) or combined heat/cooling meter (meter type 3 and 6).

Meter type			
Heat meter (MID modules B+D)		2	
Heat/cooling meter (MID modules B+D & TS+DK268)	Θ_{hc} = OFF	3	
Cooling meter (TS27.02+DK268)		5	
Heat/cooling meter (MID module B+D & TS27.02+DK268)	Θ_{hc} = ON	6	
Country code (language on label etc.)			XX

If MULTICAL® 603 has been supplied as a heat/cooling meter (meter type 3 and 6), heat energy (E1) is measured at a positive temperature difference (t1>t2) whereas cooling energy (E3) is measured at a negative temperature difference (t1<t2). Temperature sensor t1 (marked in red) is mounted in the inlet, whereas t2 (marked in blue) is mounted in the outlet.

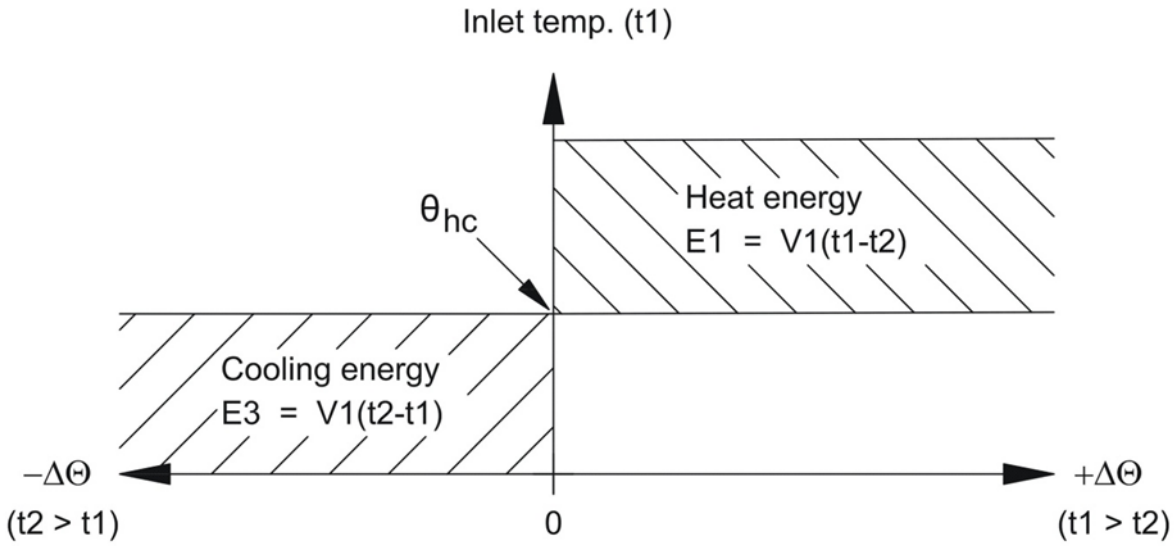

θ_{hc} functions as a limit value for the measurement of heat/cooling energy. With θhc enabled, heat energy is only measured when t1 is greater than or equal to θ_{hc}. Likewise, cooling energy is only measured if the inlet temperature t1 is lower than θ_{hc}.

In heat/cooling meters, the limit value θhc should be set at the highest temperature which has appeared in the inlet in connection with cooling, e.g. 25 °C. If the meter is to be used for billing, the functionality θhc is disabled. Thereby, the differential temperature alone decides whether cooling or heat energy is invoiced.

Configuration of the function θ_{hc} is only possible in meter type 6. Configuration is possible in the interval 0.01..180.00 °C. In order to disable θ_{hc}, it must be configured at 250.00 °C. In other meters than meter type 6, θ_{hc} is permanently "Off" in the configuration. θ_{hc} is configured via the SETUP loop or by means of the PC-program METERTOOL HCW, see paragraph 6.3 and 14 for more details.

Note: There is no hysteresis in connection with shift between heat and cooling energy measurement ($\Delta\theta_{hc}$= 0.00 K).

7.5 Min/max calculations of power (P) and flow (Q)

MULTICAL® 603 registers minimum and maximum flow and power on both monthly and yearly basis. The registration can be read in full via data communication. Furthermore, the two latest yearly registrations and the latest 12 monthly registrations can be read in the USER loop. It depends on the selected display code (DDD-code) whether these registrations are displayed in the USER loop. Read more about the DDD-code in paragraph 3.2.4.

The display can show the current minimum and maximum registration of present year and month. In addition historical data, i.e. minimum and maximum values registered for previous year and months can be displayed. The dates, on which minimum or maximum values were measured, are displayed in format 20YY.MM.DD. Using serial reading the time (hh.mm.ss) can be included too. Below you see the complete overview of the registers.

Note: Historical readings (logging values) are not part of the TECH loop. They are only displayed in the USER loop, and only if the DDD-code in question includes these readings.

Flow (V1)

USER loop	
12.1	*Date of max this year*
12.2	*Data of max this year*
12.3	*Date of max yearly logger*
12.4	*Data of max yearly logger*
12.5	*Date of max this month*
12.6	*Data of max this month*
12.7	*Date of max monthly logger*
12.8	*Data of max monthly logger*
12.9	*Date of min. this year*
12.10	*Data of min. this year*
12.11	*Date of min. yearly logger*
12.12	*Data of min. yearly logger*
12.13	*Date of min. this month*
12.14	*Data of min. this month*
12.15	*Date of min. monthly logger*
12.16	*Data of min. monthly logger*

Thermal power (V1)

USER loop	
14.1	*Date of max this year*
14.2	*Data of max this year*
14.3	*Date of max yearly logger*
14.4	*Data of max yearly logger*
14.5	*Date of max this month*
14.6	*Data of max this month*
14.7	*Date of max monthly logger*
14.8	*Data of max monthly logger*
14.9	*Date of min. this year*
14.10	*Data of min. this year*
14.11	*Date of min. yearly logger*
14.12	*Date of min. yearly logger*
14.13	*Date of min. this month*
14.14	*Data of min. this month*
14.15	*Date of min. monthly logger*
14.16	*Data of min. monthly logger*

Below are examples of display readings of the date and data readings. The frames around the date indicate whether the date is connected to yearly or monthly data. In data readings of yearly data the last two digits of the year are marked in frames, whereas the two digits for month are marked for monthly data. Furthermore, the symbols ”MIN” and ”MAX” are illuminated to indicate whether the values are minimum or maximum values. The symbol “LOG” is illuminated for historical readings.

Examples of yearly date and data (max values) for flow

Date of max this year

Data of max this year

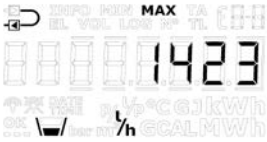

Date of max yearly logger

Data of max yearly logger

Examples of monthly date and data (min. values) for power

Date of min. this month

Data of min. this month

Date of min. monthly logger

Data of min. monthly logger

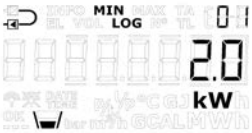

All minimum and maximum values are calculated as the average of a number of current flow or power measurements depending on the chosen averaging period. All calculated flow and power values from the averaging period are used in the calculation of the average. Calculated values are compared to previous values, and the new value is saved if it exceeds the previous maximum value or is lower than the previous minimum value. The averaging period used in all calculations can be selected in the interval 1...1440 minutes in leaps of 1 minute (1440 min. = 24 hours). The averaging period and the target dates are stated in the order. Read more about order data in paragraph 3.3. If not otherwise stated in the order, the default averaging period of 60 minutes is used. This value can later be changed via the SETUP loop or METERTOOL HCW.

Please note the following:

- In the display the date is shown in the format 20YY.MM.DD, but by serial reading the time can be stated too, and the format then becomes YY.MM.DD, hh.mm.ss.

- The average is calculated continuously over time, i.e. the average of values is calculated from now on and back in time according to the chosen averaging period. As a result, the min/max calculation is immune to the clock setting and will always move continuously through time.

7.6 Temperature measurement

Inlet and outlet temperatures are measured by means of an accurately matched Pt500 or Pt100 sensor pair. During each temperature measurement MULTICAL® 603 sends measuring current through each sensor. The current is approx. 0.5 mA for Pt500 and approx. 2.5 mA for Pt100. Two measurements are carried out in order to suppress possible 50 Hz (or 60 Hz) low-frequency noise picked up via the sensor cables. Furthermore, current measurements are made by internal reference resistors in order to secure optimum measuring stability.
The display presents inlet and outlet temperatures as well as temperature difference in range 0.00 °C to 185.00 °C. Inlet or outlet temperatures below 0 °C and above 185 °C are indicated as lines in the display, but serial reading includes 0.00 °C and 185.00 °C respectively. If one or both temperature sensors are outside the measuring range, the info code is set as shown in paragraph 7.7.
At negative temperature difference (inlet < outlet) the temperature difference is displayed with a negative sign and cooling energy is calculated. It depends on the selected DDD-code whether the temperature difference is shown in the display.

Measuring current and power

Measuring current is only sent through the temperature sensors during the short duration of the temperature measurement. The effective power that is deposited in the sensor elements is thus very small, and its influence on self-heating of the temperature sensors is typically less than 1/1000 K.

	Pt100	Pt500
Measuring current	< 2.5 mA	< 0.5 mA
Peak power	< 1.0 mW	< 0.2 mW
RMS influence (fast mode)	< 10 μW	< 2 μW
RMS influence (normal mode)	< 2 μW	< 0.4 μW

Average temperatures

MULTICAL® 603 continuously calculates the average temperatures of inlet and outlet (t1 and t2) in °C without decimals, and background calculations E8, E9, E10 and E11 are carried out with every volume calculation (e.g. with every 0.01 m^3 at a meter size of q^p 1.5), whereas the display is updated with every integration (depending on the L-code). The average calculations are thus volume weighted and can be used directly for checking purposes.

Pre-programmed temperatures

The temperature t3 can either be measured or pre-programmed in the calculator's memory, whereas the temperatures t4 and t5 only can be pre-programmed. See paragraphs 7.1 and 7.12 for examples of using these additional temperatures.

2-wire sensor connection

MULTICAL® 603-A has 2-wire Pt100 connection, whereas MULTICAL® 603-C/E/F has 2-wire Pt500 connection. It applies to all 2-wire sensor connections that the cable lengths and cross sections of the two sensors which are used as temperature sensor pair for a heat or cooling meter must always be identical, and that cable sensors must neither be shortened nor extended.

The limitations connected to the use of 2-wire sensor pairs according to EN 1434-2 appear from the table below. In addition, the table indicates how big error the longer 2-wire cables will result in.

Kamstrup supplies Pt500 sensor sets with up to 10 m cable (2 x 0.25 mm^2).

Cable cross section [mm^2]	Pt100 sensors		Pt500 sensors	
	Max cable length [m]	Error display [1] [K/m]	Max cable length [m]	Error display [1] [K/m]
0.25	2.5	0.450	12.5	0.090
0.50	5.0	0.200	25.0	0.040
0.75	7.5	0.133	37.5	0.027

Table 5

[1] *The error is calculated for copper cable at 20 °C. At higher cable temperatures, the error will be bigger.*

MULTICAL® 603 has a temperature sensor offset function, see paragraph 7.3, which can be used to reduce the error that derives from the cable resistance and the zero error of the sensors.

4-wire sensor set

For installations requiring longer cables than listed in the table above, it is recommended to use 4-wire sensor sets. MULTICAL® 603-B has 4-wire Pt100 connection, whereas MULTICAL® 603-D/G/H has 4-wire Pt500 connection.

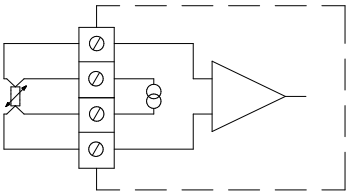

MULTICAL® 603 has a “real” 4-wire construction, which uses two conductors for the measuring current and two other conductors for the measuring signal, which means that the construction is in theory uninfluenced by long sensor cables. In practice, cables ought not to be longer than 100 m, and it is recommended to use 4 x 0.25 mm^2.

As the 4-wire signal inputs have a very high impedance, a disconnected wire could lead to an arbitrary temperature and the information code “Above the measuring range” (disconnected) or “Below the measuring range” (short-circuited) would be displayed.

7.7 Information code types

MULTICAL® 603 constantly monitors a number of important functions. If a serious error occurs in measuring system or installation, a flashing “INFO” will appear in the display. The “INFO” field keeps flashing as long as the error is present no matter which reading you choose. The “INFO” field automatically disappears when the reason for the error has been removed.

Note: Configuration for “Manual reset of info code” is not possible in MULTICAL® 603

7.7.1 Information code types in display

In MULTICAL® 603 each digit of the info code is dedicated to one of the meter's part elements. For example, the second digit from the left in the display is always related to information on temperature sensor t1. At the same time, the info code is section divided so that it from left to right consists of: general information, temperature information (t1, t2, t3), flow information (V1, V2) and information about the pulse inputs A and B (In-A1/A2 and In-B1/B2). See the table below for an overview of the info codes and response times.

Display digit									
1	2	3	4	5	6	7	8		
Info	t1	t2	t3	V1	V2	In-A	In-B	Description	Response time to aktive INFO
1								No voltage supply [1]	-
2								Low battery level	< 3 minutes
9								External alarm (e.g. via KMP)	< 1 second
	1							t1 Above measuring range or disconnected [3]	< 3 minutes
		1						t2 Above measuring range or disconnected [3]	< 3 minutes
			1					t3 Above measuring range or disconnected [3]	< 3 minutes
	2							t1 Below measuring range or short-circuited [3]	< 3 minutes
		2						t2 Below measuring range or short-circuited [3]	< 3 minutes
			2					t3 Below measuring range or short-circuited [3]	< 3 minutes
	9	9						t1-t2 Invalid temperature difference	< 3 minutes
				1				V1 Communication error	< 1 day
					1			V2 Communication error	< 1 day
				2				V1 Wrong pulse figure	< 1 day
					2			V2 Wrong pulse figure	< 1 day
				3				V1 Air	< 1 day
					3			V2 Air	< 1 day
				4				V1 Wrong flow direction	< 1 day
					4			V2 Wrong flow direction	< 1 day
				6				V1 Increased flow (flow1 > qs, for more than 1 hour)	< 1 hour
					6			V2 Increased flow (flow2 > qs, for more than 1 hour)	< 1 hour
				7				V1/V2 Burst, water loss (flow1 > flow2)	< 120 seconds
					7			V1/V2 Burst, water penetration (flow1 < flow2)	< 120 sekunder
				8				V1/V2 Leakage, water loss (M1 > M2)	< 1 day
					8			V1/V2 Leakage, water penetration (M1 < M2)	< 1 day
						7		In-A2 Leakage in the system	< 1 day
						8		In-A1 Leakage in the system	< 1 day
						9		In-A1/A2 External alarm	< 5 seconds
							7	In-B2 Leakage in system [2]	< 1 day
							8	In-B1 Leakage in system [2]	< 1 day
							9	In-B1/B2 External alarm	< 5 seconds

[1] This info code parameter does not appear from the current info code as it is only active when the meter is without supply. The info code is saved in the info log, and thus it will appear from the info log that the meter has been without power supply.

[2] Info code for leakage at pulse input B must be actively selected.

[3] Da 4-leder signalindgangene har en meget høj impedans, vil en afbrudt ledning kunne medføre en vilkårlig temperatur, herunder at informationskoden viser "Over måleområdet" (frakoblet) eller "Under måleområdet" (kortsluttet)

Note: Info codes are configurable. Therefore, it is not certain that all parameters above are available in a given MULTICAL® 603. This depends on the selected country code.

Examples of information codes

Flashing ”INFO”

If the information code is different from ”00000000”, a flashing “INFO” will appear in the meter’s display.

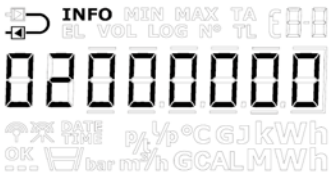

Current information code

The current info code can be displayed by scrolling to the info code reading using the keys on the calculator front. When the current info code is displayed, “INFO” stops flashing.

In the example, the current info code indicates that t1 is below the measuring range or short-circuited.

Info event counter

The info event counter is a secondary view for the info code, indicating how many times the info code has been changed.
The value is increased every time the info code is changed.
The info event counter of a new meter will be 0 as transport state prevents counting during

Info logger

The display reading states the date of the latest info code change.

The display reading shows the info code from the previously displayed date. Repeated activations of the front keys alternately induce date and corresponding info code.
The data logger saves the latest 250 changes.
3The latest 50 changes can be displayed. All 50 changes can be read by means of METERTOOL.

Note: The info code is saved in the meter’s data logger too for diagnostic purposes.

The info code types which are related to the meter’s different sensors will in case of error influence the display readings, to which they are tied. In connection with current values for temperatures and power, three horizontal lines will appear in the display, and the energy registers, in which counting is dependent on the sensor function, will not be accumulated. See paragraphs 6 and 7.7 for further information on sensor errors.

Temperature sensor error

The error can be due to the sensor being disconnected or short-circuited. An erroneous ΔΘ alone will not be considered a temperature sensor error.

In case of an error in one or more temperature sensors (t1, t2 and t3), the value of the serial communication of the sensor in question will be 0.00 °C (lowest valid temperature) or 185.00 °C (highest valid temperature) respectively, depending on the measurement being below range (sensor short-circuited) or above range (sensor disconnected). The display reading of the sensor in question shows lines in the three digits to the far right in the display, independent of the cause of the error - decimal points are not included.

The display readings of ΔΘ and current power will also show three lines for errors in one or more temperature sensors. In serial communication, the value will be 0.00 K and 0.0 kW.

Information codes in transport state

The meter leaves the factory in transport state, i.e. the info codes are active in the display, but not in the meter's data logger. This prevents the counting of info events and the saving of non-relevant data in the info log during transportation. The first time the meter registers flow after the installation, the info code automatically becomes active.

7.7.2 Information code types on serial communication

Bit	Value	Info
0	1	Supply voltage disconnected
1	2	Low battery level
2	4	External alarm (e.g. via KMP)
3	8	t1 Above measuring range or switched off
4	16	t2 Above measuring range or switched off
5	32	t1 Below measuring range or short-circuited
6	64	t2 Below measuring range or short-circuited
7	128	Wrong Δt (t1-t2)
8	256	V1 Air
9	512	V1 Wrong flow direction
11	2048	V1 Increased flow (flow1 > qs, for more than 1 hour)
12	4096	In-A1 Leakage in the system
13	8192	In-B1, leakage in the system
14	16384	In-A1/A2 External alarm
15	32768	In-B1/B2 External alarm
16	65536	V1 Communication error
17	131072	V1 Wrong pulse figure
18	262144	In-A2 Leakage in the system
19	524288	In-B2 Leakage in the system
20	1048576	t3 Above measuring range or switched off
21	2097152	t3 Below measuring range or short-circuited
22	4194304	V2 Communication error
23	8388608	V2 Wrong pulse figure
24	16777216	V2 Air
25	33554432	V2 Wrong flow direction
27	134217728	V2 Increased flow (flow2 > qs, for more than 1 hour)
28	268435456	V1/V2 Burst, water loss (flow1 > flow2)
29	536870912	V1/V2 Burst, water penetration (flow1 < flow2)
30	1073741824	V1/V2 Leakage, water loss (M1 > M2)
31	2147483648	V1/V2 Leakage, water penetration (M1 < M2)

7.8 Transport state

Before MULTICAL® 603 for the first time has registered a flow of 1 % of q_p or larger, the meter is in transport state. The transport state includes that:

- No info codes are saved in the meter's logger and the info event counter is not active.
- A power saving measuring sequence is used.
- The SETUP loop is available, which enables you to configure the meter before commissioning.
  Note: In general, the SETUP loop is available, it can however be limited by the selected country code.

Be aware that the access to the SETUP loop will be blocked and the meter will leave transport mode if the configuration in the SETUP loop is ended by the function "EndSetup". When the meter has left transport state, info codes will be logged and the measuring sequence is changed to the one ordered for the meter (determined by the L-code). The meter cannot revert to transport state, unless a total reset is made. The access to the SETUP loop can, however, be opened again by separating calculator top and base. This means breaking the installation seal, see paragraph 4.6.

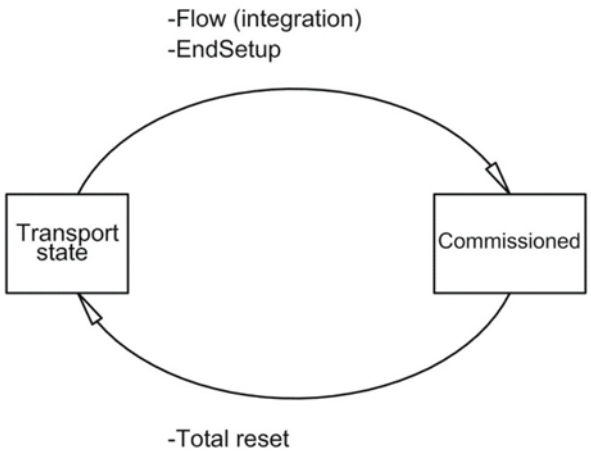

Radio communication

On delivery, the meter is in transport state and the meter's radio communication is deactivated. The radio is activated when the meter for the first time has registered a flow of 1 % of q_p or larger. In transport state and after commissioning of the meter, the radio can be enabled either via the SETUP loop or by making a forced dial-up (both arrow keys are activated until "CALL" is displayed). Enabling the radio does *not* cause the meter to leave the transport state. Read more about deactivating radio communication in paragraph 6.3 about the SETUP loop.

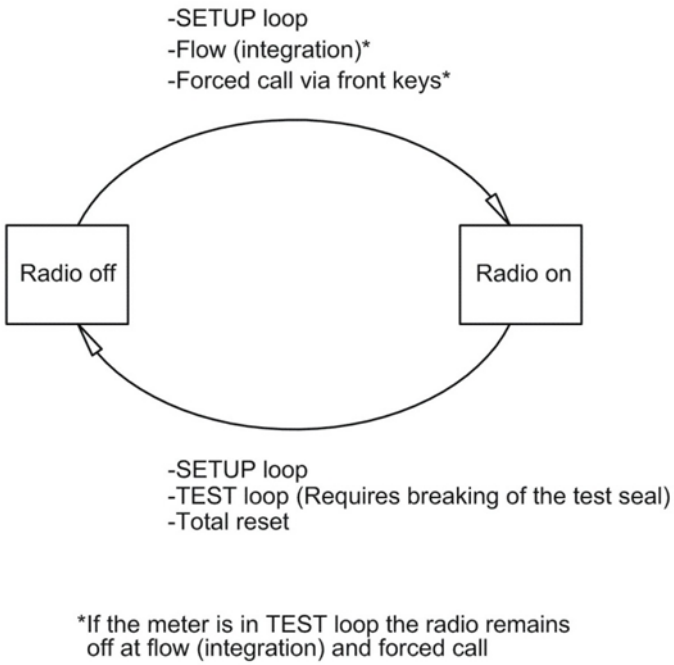

Test mode

When accessing the TEST loop, radio communication is disabled. In the TEST loop, flow will *not* activate the radio.

Note: In order to gain access to the TEST loop, the test seal must be broken, and the meter must subsequently be re-verified.

7.9 Info logger

Every time the information code changes, the below-mentioned registers are logged.

Register type	Description
Date (20YY.MM.DD)	Year, month and day of logging time.
Clock (hh.mm.ss)	Time
Info	Information code on above date
E1	Heat energy
E3	Cooling energy

It is possible to data read the latest 250 changes of the information code as well as the dates the changes were made. When the information code is read from the display, 50 changes including dates can be read. All of the 250 changes can also be read by means of the PC program LogView HCW.

INFOEVENT

Every change of a parameter of the info code results in an info event if the selected country code is configured with the parameter. It is therefore not certain that all parameters result in an info event.

An info event results in accumulation of the info event counter as well as logging in the info logger. This does not apply as long as the meter is in transport state or if the calculator top and base are physically separated.

Reconfiguration of active parameters of the info code will influence future info codes, whereas all logged info codes remain as they were at the time of logging.

7.10 Config data logger

Every time the configuration is changed, the below-mentioned register types are logged. It is possible to data read the latest 50 changes of the config log as well as the dates the changes were made. The meter permits only 50 changes, unless you break the legal seal and carry out a total reset of the meter, which also resets the config log.

Note: The fiftieth change of configuration must be carried out on the installation site, i.e. either via the SETUP loop or via METERTOOL HCW.

Register type	Description
Date (20YY.MM.DD)	Year, month and day of change
Hour (hh.mm.ss)	Time
Configuration number	The new configuration number
E1, E3 and V1	Meter counts are saved just after reconfiguration
Hour counter	Hour counter is saved
t offset	The temperature offset value is saved.
V1 pulse figure	The pulse figure of V1 (imp/l or l/imp) is saved
V1 q_p	Nominal flow q_p is saved

The meter will always carry out a config logging if the user has had access to the SETUP loop, no matter whether the user has changed the configuration or not.

7.11 Summer/winter time adjustment

MULTICAL® 603 is available with configuration for DST (Daylight Saving Time ~ summer/winter time). The meter's country code determines the DST-configuration algorithm, so that it corresponds to the DST regulations of the country, for which the meter is intended. If the meter is configured with DST and you do not want to use it, the DST-function can be disabled in the PC-program METERTOOL HCW. The DST-function has direct influence on the meter's internal clock and time-controlled tariff limits. Time stamps for loggings of events and values are saved in standard time together with information on the current DST offset. The current DST offset is applied to all logged time stamps when the DST function is active, the applied DST offset is removed from time stamps if the DST function is deactivated in the meter and vice versa if the DST function is reactivated.

DST and tariffs: The time-controlled tariff is influenced by the DST offset. The entered tariff limits, for example, will be moved an hour forward at DST start and an hour backwards at the end of DST (Danish example). If the DST function is disabled after a period in operation, the time limits will always follow standard time. Accumulated energy in the tariff registers remains unchanged and thus reflects the time limits with enabled DST-function. The same applies vice versa if the DST-function is reactivated.

DST and loggers: The logging time follows normal time. For example, a meter with enabled DST-function, which logs data at 00.00 during winter time, will log data at 01.00 a.m. during summer time (Danish example). If the DST-function is disabled after delivery and historical logger values are subsequently read, the DST offset of previous values will reflect the new configuration and be removed from the time stamp. See example in below table. Read logging times will always reflect the current DST status.

	DST enabled	DST disabled
Logs target date	Logging time	Logging time
1 January	00:00	00:00
1 February	00:00	00:00
1 March	00:00	00:00
1 April	01:00	00:00
1 May	01:00	00:00
1 June	01:00	00:00
1 July	01:00	00:00
1 August	01:00	00:00
1 September	01:00	00:00
1 October	01:00	00:00
1 November	00:00	00:00
1 December	00:00	00:00

DST and max/min. values: Time stamps on logging of max/min. values follow standard time. If the time stamp of a value is read, it will be stated with current DST offset. If the DST-function is disabled after delivery, the DST offset will be removed from the time stamps of historical values as it is done with the loggers.

DST and readout of logging data: Data can either be read from a register, which includes time in standard time and DST offset as two separate parameters, or alternatively from a register, which includes time comprising DST offset as a parameter. If the DST-function is disabled after delivery, information on the DST offset will be removed from time stamps related to the historical values.

7.12 Preset and Scheduler functions for temperature inputs

With MULTICAL® 603, it is possible to program (preset) values of the meter's temperature inputs. The primary need for programmed values is in the case when measuring hot water energy where the cold temperature is required to be programmed as it in practice cannot be measured. Read more about application examples in paragraph 7.1. In addition to programming a fixed value (preset), it is also possible to program a variable value that varies over the 12 months of a year (Scheduler). The table below shows which temperature inputs of which meter type can be programmed.

Note: The temperature inputs t1 and t2 are the two legal inputs, which means that they cannot be programmed on an approved heat meter, cooling meter or combined heat/cooling meter.

			Temperature inputs			
Meter type		Approvals	t1	t2	t3	t4
1	Heat meter	MID module B	-	-	☑	☑
2	Heat meter	MID module B+D	-	-	☑	☑
3	Heat/cooling meter	MID module B+D & TS 27.02 Θ_{HC} = OFF	-	-	☑	☑
4	Heat meter	National approval	-	☑	☑	☑
5	Cooling meter	TS 27.02+BEK1178	-	-	☑	☑
6	Heat/cooling meter	MID module B+D & TS 27.02 Θ_{HC} = ON	-	-	☑	☑
7	Volume meter	-	-	☑	☑	☑
9	Energy meter	-	-	☑	☑	☑

7.13 Differential energy and volume calculation

MULTICAL® 603 has integrated differential calculation of energy and volume. The result of these calculations are saved in the following four registers:

- dE: difference Energy (E4 - E5 > 0)
- cE: control Energy (E4 - E5 < 0)
- dV: difference Volume (V1 - V2 > 0)
- cV: control Volume (V1 - V2 < 0)

All four registers are accumulated registers where dE and dV count at a positive difference and cE and cV count at a negative difference. A reading of both the difference and the control registers reveals how much registers have been counted with a positive or negative difference over a given period, thus it is possible to get information about how stable the system has been throughout the selected period.

The calculations follow the selected integration mode, and the calculations are thus carried out at the selected integration interval. All four registers can be displayed in the meter's USER loop and are saved in the meter’s loggers. See paragraph 3.2.4 about display setup (DDD-codes) and paragraph 3.2.10 about possible logger profiles (RR-codes).

Below is a calculation example of the dE and cE registers as well as examples of display readings.

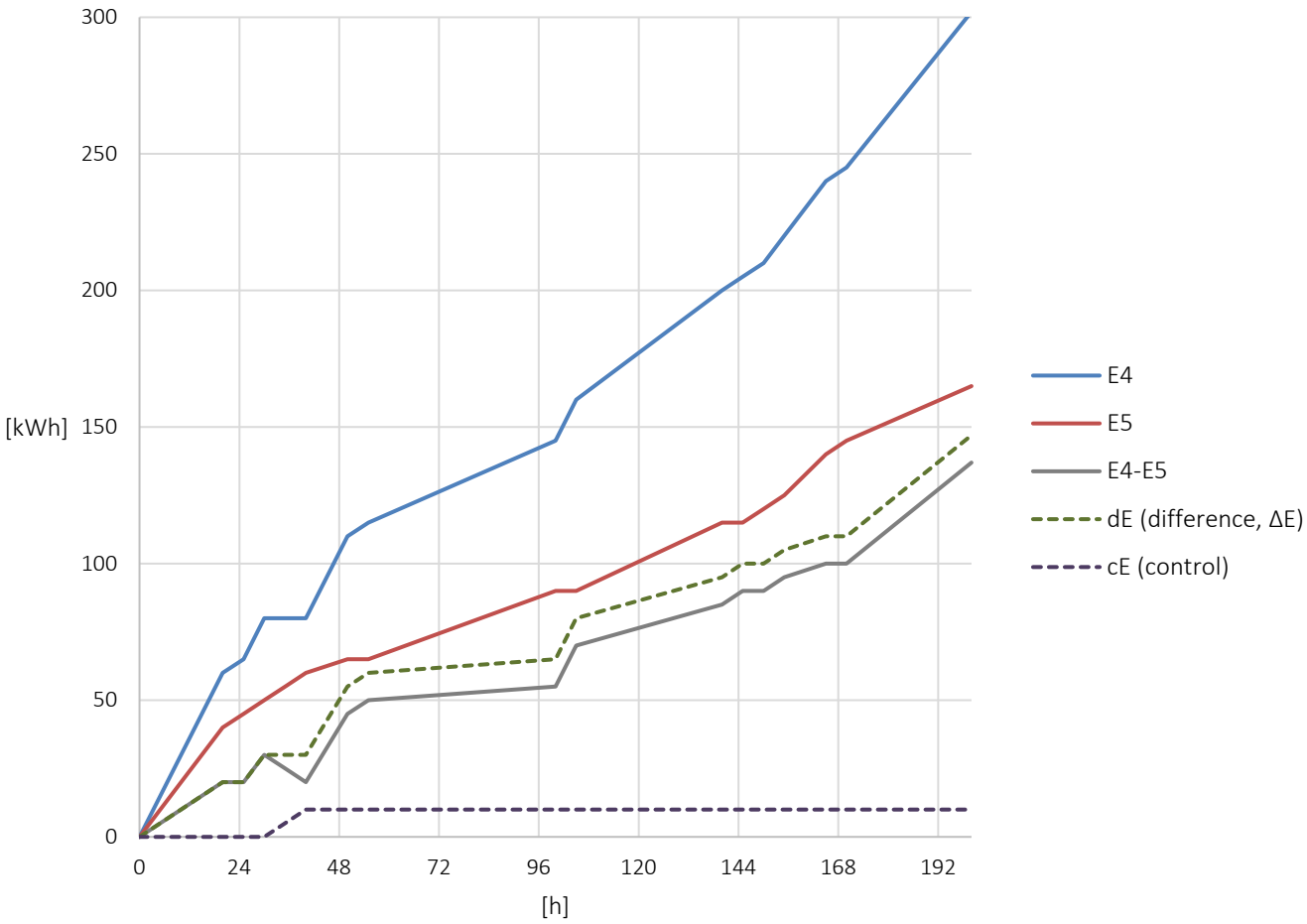

In a scenario where no counting is taking place in register E4 (energy fed), e.g. due to air in flow meter V1, the counting will take place in cE (control). This is shown in the above example between data items 24 and 48 [h].

Energy	
Difference energy *dE*	
Control energy *cE*	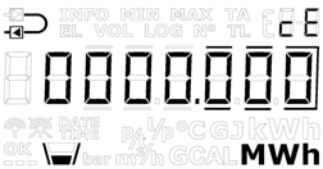

Volume	
Difference volume *dV*	
Control volume *cV*	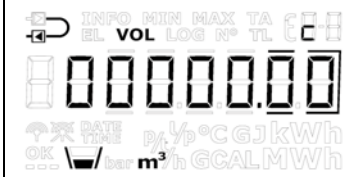

8 Flow sensor connection

MULTICAL® 603 has up to 6 pulse inputs for connection of flow sensors where V1 and V2 are used for calculating energy, whereas In-A1, In-B1, In-A2 and In-B2 can be used for connecting, for example, cold water meters and electricity meters. The number of pulse inputs may vary according to meter configuration.

Pulse figure and resolution of the V1 and V2 inputs are configured via the CCC-code in MULTICAL® 603. If two flow sensors are used on V1 and V2, respectively, these two sensors must be identical as the pulse inputs share configuration. For an overview of CCC-codes, see paragraph 3.2.3.

Depending on application type, MULTICAL® 603 can be connected to one or two flow sensors for energy calculation purposes, see paragraph 7.1 for examples of application types. Typically, one flow sensor is used in heat or cooling installations, this flow sensor is always connected to V1, regardless if it is positioned in inlet or outlet.

Connection PCB with the possibility of V1 and V2 can receive pulses from both electronic and mechanical flow sensors. This enables connection of almost any type of flow sensor with pulse output. For flow sensors with 24 V active pulse output, see paragraph 8.4.

①	ULTRAFLOW® (see paragraph 8.1)
②	Reed/relay switch (see paragraph 8.2)
③	Transistor (see paragraph 8.3)

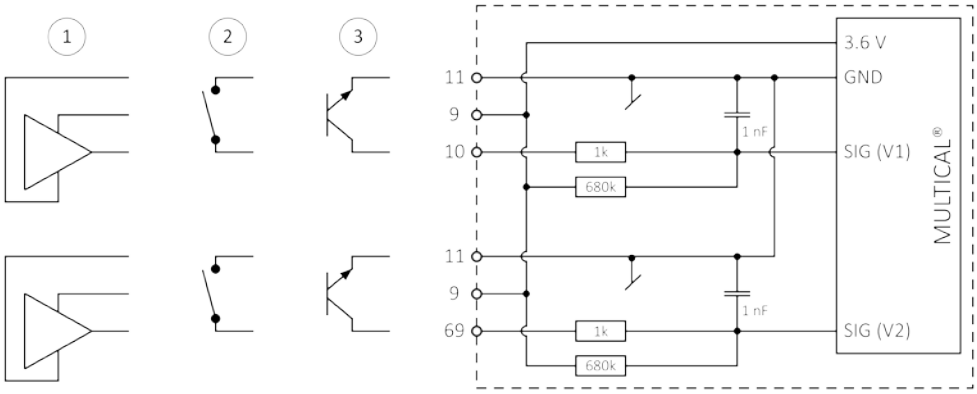

8.1 ULTRAFLOW® (Connection type 1-2-7-8)

Kamstrup's ULTRAFLOW® flow sensors are supplied from the calculator and connected according to the table below. The power consumption of ULTRAFLOW® is very low and, at the same time, matches the stated battery lifetimes of MULTICAL® 603, see paragraph 10.3.

Cable ULTRAFLOW®	Screw terminals V1	Screw terminals V2
Red (3.6 VDC)	9	9
Yellow (signal)	10	69
Blue (GND)	11	11

For ULTRAFLOW®, CCC-codes 1xx, 4xx and 5xx are used.

8.1.1 Auto Detect of ULTRAFLOW® X4

Auto Detect enables the exchange of ULTRAFLOW® X4 on MULTICAL® 603 without changing the CCC code.

MULTICAL® 603 can automatically adapt its CCC code to match the connected ULTRAFLOW® X4 via the function Auto Detect. Auto Detect is active with CCC code 8xx.

Auto Detect functions in such a way that MULTICAL® 603 during start up automatically retrieves the correct information about pulse figure and q_p from the connected ULTRAFLOW® X4 flow sensors. MULTICAL® 603 adapts its

configuration to the values received from ULTRAFLOW® X4. Auto Detect is initiated when the calculator top and base are separated and reassembled.

8.1.1.1 Auto Detect with one ULTRAFLOW® X4 on V1

To use the Auto Detect functionality between MULTICAL® 603 and ULTRAFLOW® X4, follow the procedure below.

①		Break the installation seal[1], and separate the calculator's top and base
②	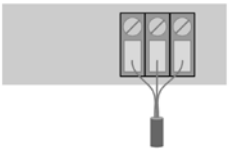	Mount ULTRAFLOW® X4 on input V1 in MULTICAL® 603 as stated in the table in paragraph 8.1
③		Assemble the calculator's top and base
④	*Typical display duration 5 s*	Note the flashing display on MULTICAL® 603, indicating that a search for ULTRAFLOW® X4 is being performed
⑤	*Display duration 5 s*	Note the static display on MULTICAL® 603, indicating that ULTRAFLOW® X4 has been found and registered successfully[2]
⑥		MULTICAL® 603 automatically changes to the primary energy display in the USER loop

[1] Remember to re-establish the installation seal after completed Auto Detect.

[2] A configuration logging is carried out each time MULTICAL® 603 registers a change to qp of ULTRAFLOW® X4 on V1.

8.1.1.2 Auto Detect with two ULTRAFLOW® X4 on V1 and V2

The procedure for Auto Detect with two ULTRAFLOW® X4 is identical to the table in paragraph 8.1.1.1, except for item ② where an identical ULTRAFLOW® X4 connected to input V2 is mounted.

ULTRAFLOW® X4, which is mounted on V1, will always be decisive for correct pulse figure and qp, also for an application in which two ULTRAFLOW® X4 are used. This means that changing ULTRAFLOW® X4 on V2 will not result in a configuration logging, but only cause an information code. The info code will be present until ULTRAFLOW® X4 on either input V1 or input V2 has been exchanged so that both ULTRAFLOW® X4 are identical. Changing ULTRAFLOW® X4 to another pulse figure or qp on input V1 always results in a configuration logging.

In applications with two ULTRAFLOW® X4, both ULTRAFLOW® X4 must be exchanged to the same type, i.e. identical pulse figures and qp.

If pulse figure and qp are not identical, this results in an info code, see the description in paragraph 8.1.1.4.

Note that Auto Detect with two ULTRAFLOW® X4 requires that the meter has been configured for 2 ULTRAFLOW® (Connection type 2 or 8) and at the same time that CCC = 8xx has been selected.

8.1.1.3 Auto Detect information codes

In case of incorrect ULTRAFLOW® or communication error with ULTRAFLOW® X4, MULTICAL® 603 shows a static info code, describing the occurred error (item ⑤ in the table in paragraph 8.1.1.1). The table below describes the possible info codes and their meaning.

Information code	Description	Remedy
INFO UF 00001000 *Display duration 5 s*	Communication error on input V1.	Separate the calculator, and check that ULTRAFLOW® X4 has been mounted correctly in the screw terminals of input V1. Then, repeat the procedure in paragraph 8.1.1.1 from item ③.
INFO UF 00002000 *Display duration 5 s*	Wrong pulse figure on input V1.	The config log is full. It is no longer possible to exchange ULTRAFLOW® X4 on input V1 with a size that differs from the latest logged size of V1.
INFO UF 00000100 *Display duration 5 s*	Communication error on input V2.	Separate the calculator, and check that ULTRAFLOW® X4 has been mounted correctly in the screw terminals of input V2. Then, repeat the procedure in paragraph 8.1.1.1 from item ③.
INFO UF 00000200 *Display duration 5 s*	Wrong pulse figure on input V2.	ULTRAFLOW® X4 on input V2 differs from ULTRAFLOW® X4 on input V1. Make sure that both ULTRAFLOW® X4 are identical, and repeat the procedure in paragraph 8.1.1.1.
INFO UF 00001100 *Display duration 5 s*	Communication error on both input V1 and input V2.	Separate the calculator, and check that ULTRAFLOW® X4 has been mounted correctly in the screw terminals of input V1 and of input V2. Then, repeat the procedure in paragraph 8.1.1.1 from item ③.

Information code	Description	Remedy
INFO UF 00001200 *Display duration 5 s*	Communication error on input V1 as well as wrong pulse figure on input V2.	Separate the calculator, and check that ULTRAFLOW® X4 has been mounted correctly in the screw terminals of input V1. Check that both ULTRAFLOW® X4 are identical. Then, repeat the procedure in paragraph 8.1.1.1 from item ③.
INFO UF 00002100 *Display duration 5 s*	Wrong pulse figure on input V1 as well as communication error on input V2.	The config log is full. It is no longer possible to exchange ULTRAFLOW® X4 on either input V1 or input V2 with a size that differs from the latest logged size of V1. Separate the calculator, and check that ULTRAFLOW® X4 has been mounted correctly in the screw terminals of input V2. Check that both ULTRAFLOW® X4 are identical. Then, repeat the procedure in paragraph 8.1.1.1 from item ③.
INFO UF 00002200 *Display duration 5 s*	Wrong pulse figure on both input V1 and input V2.	The config log is full. It is no longer possible to exchange ULTRAFLOW® X4 on either input V1 or input V2 with a size that differs from the latest logged size of V1.

8.1.2 The need for longer cables between MULTICAL® 603 and ULTRAFLOW®

In general, cables of up to 10 m between MULTICAL® and ULTRAFLOW® are allowed. In case longer cables are needed, Kamstrup can deliver two solutions, either Cable Extender Box (6699-036) or Pulse Transmitter (6699-903). With these solutions, the cable length can be extended up to 30 m or 100 m, respectively. Both solutions have a number of advantages and disadvantages, which are outlined in the table below.

Application options	Cable Extender Box	Pulse Transmitter
Up to 30 m cable between ULTRAFLOW® and MULTICAL®	Yes	Yes
Up to 100 m cable between ULTRAFLOW® and MULTICAL®	No	Yes
Info codes and data communication between ULTRAFLOW® and MULTICAL®	Yes	No
Galvanic separation between ULTRAFLOW® and MULTICAL®	No	Yes
IP class	IP 65	IP 67

When Pulse Transmitter is used between ULTRAFLOW® and MULTICAL®, the calculator will not be able to establish data communication with ULTRAFLOW® due to the galvanic separation. To avoid faulty info codes, it is thus necessary to deselect the info codes based on data communication between MULTICAL® and ULTRAFLOW® (Info = 16-1024-2048-128-4096-8192-16384-32768).

The above info codes can be deselected by means of the PC program METERTOOL HCW by changing, for example, from CCC-code 4xx to 1xx.

8.2 Flow sensor with reed or relay switch output (Connection type L)

The reed switch output is typically placed as a pick-up unit on vane wheel or Woltmann meters where the relay switch output is typically found on magnetic inductive flow sensors. Flow sensors connected to input V1 on the screw terminals 10 (+) and 11 (-) and input V2 on the screw terminals 10 (+) and 69 (-). Screw terminal 9 is not used in this application.

The leakage current in the switch must not exceed 1 µA in OFF state, and the resistance in the switch set must not exceed 10 kΩ in ON state.

It must be ensured that MULTICAL® 603 is configured with a CCC-code whose pulse figure (imp./l or l/imp.) matches the connected flow sensors.

Example: CCC = 011 is used for a meter with reed pulses with 10 l/imp. and a max flow of 1…30 m³/h.

8.3 Flow sensor with transistor output (Connection type 7-8-C-J)

Typically, the flow sensor output is constructed as an opto coupler with BJT or FET transistor output. Flow sensors connected to input V1 on the screw terminals 10 (+) and 11 (-) and input V2 on the screw terminals 10 (+) and 69 (-). Screw terminal 9 is not used in this application.

The leakage current in the transistor must not exceed 1 µA in OFF state, and the voltage above the transistor must not exceed 0.4 V in ON state.

It must be ensured that MULTICAL® 603 is configured with a CCC-code whose pulse figure (imp./l or l/imp.) matches the connected flow sensors.

Example: CCC = 201 is used for an electronic meter with 1 l/imp. and q_p = 4…150 m³/h.

8.4 Flow sensors with active 24 V pulse output (Connection type P)

Flow sensors with active 24 V pulse output from for example Siemens, Krohne or ABB can be directly connected to MULTICAL® 603 type 603-G. At the same time, this type is prepared for connection of 4-wire temperature sensors. The connection is carried out as shown in the figure below. For further examples, see 8.4.1.

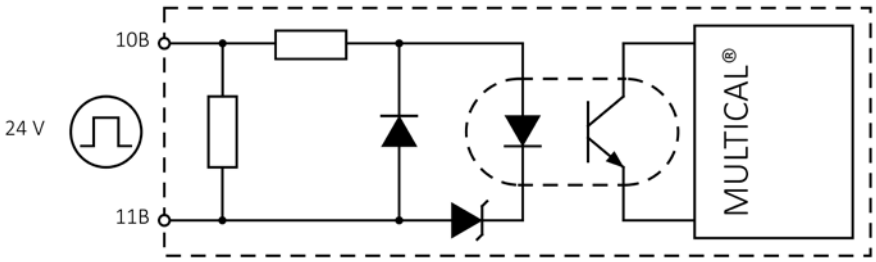

Technical data:

Pulse input voltage	12…32 V
Pulse current	Max 12 mA at 24 V
Pulse frequency	Max 128 Hz
Pulse duration	Min. 3 ms
Cable length V1	Max 100 m (Drawn with min. 25 cm distance to other cables)

Galvanic separation	Input V1 is galvanically separated from MULTICAL® 603
Insulation voltage	2 kV
Mains supply for MULTICAL®	24 VAC/VDC or 230 VAC
Battery lifetime (D-cell) of MULTICAL® including 1 standard module (e.g. wM-Bus)	Using 24 V active pulses on V1: 14 years

8.4.1 Connection examples

Flow sensor with NPN transistor output and internal 24 VDC supply

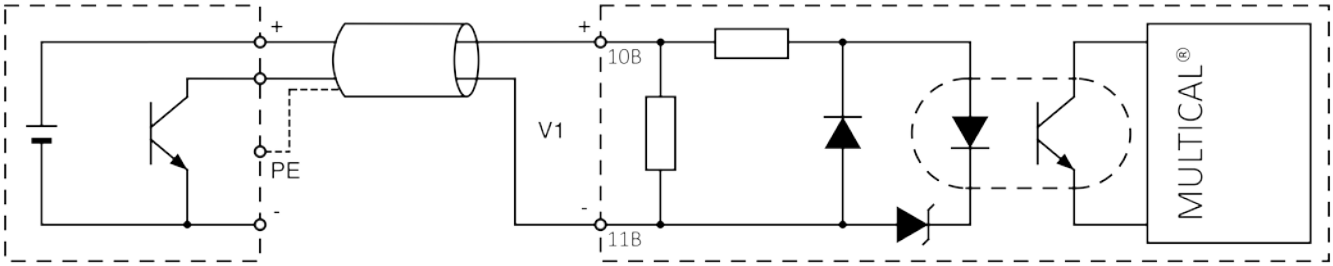

Flow sensor with PNP transistor output and internal 24 VDC supply

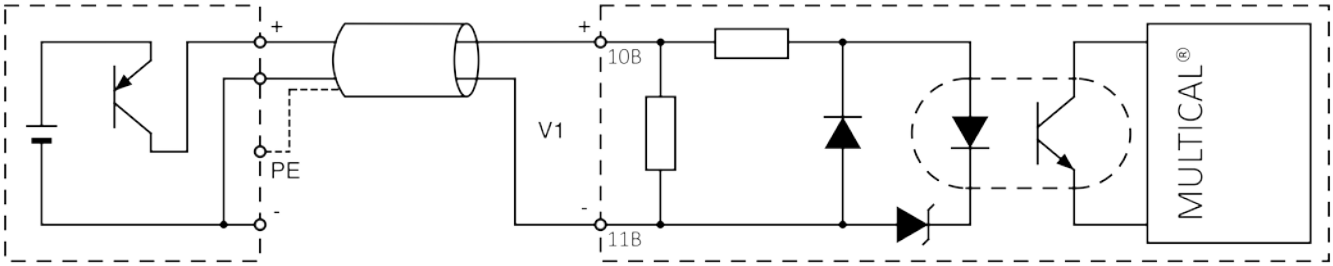

Flow sensor with transistor output and external 24 VDC supply

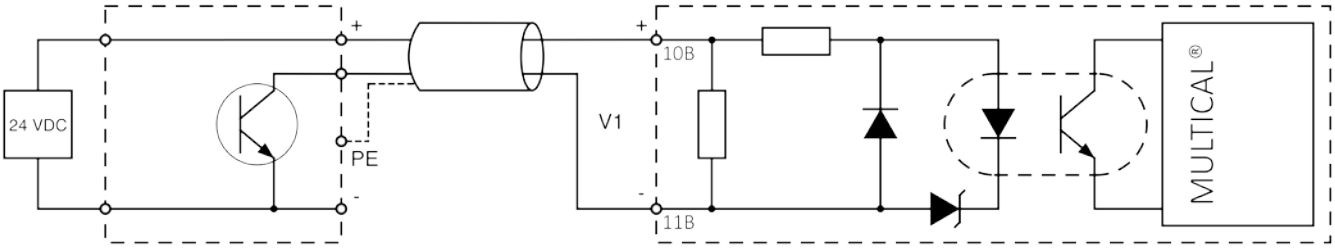

9 Temperature sensors

A platinum resistance thermometer utilises that the precious metal platinum has a very well-defined correlation between its resistance and the temperature. The correlation between the resistance and the temperature is defined in the standard EN 60751 (DIN/IEC 751) and tables showing examples of the correlation appear from paragraph 9.7. On MULTICAL® 603, Pt100 and Pt500 temperature sensors can be used for which the nominal resistance at 0 °C is 100 Ω and 500 Ω, respectively.

The correlation between the resistance R_t and the temperature t is defined as:

$$R_t = R_0(1 + At + Bt^2)$$

where R_0 indicates the resistance at 0.00 °C, whereas A and B are constants. The values R_0, A and B are determined at the verification of temperature sensor, which is carried out according to EN1434-5.

On a heat or cooling meter, a temperature sensor set is used for measuring the temperature difference between inlet and outlet. As each of the two temperature sensors has its own values for R_0, A and B, the requirement for an approved temperature sensor is, according to EN1434-1, that the maximum allowed difference in percent between the two temperature sensors, E_t, in the entire approval area is:

$$E_t = \pm\left(0{,}5 + 3\frac{\Delta\theta_{min}}{\Delta\theta}\right)$$

where Δθ is the concrete temperature difference and $\Delta\theta_{min}$ is the minimum allowed temperature difference, typically 3 K. The values R_0, A and B, of the separate temperature sensors as well as E_t appear from the certificate of the temperature sensor set.

9.1 Cable influence and connection of cables

Mostly, only relatively short cable lengths for temperature sensors are needed for small and medium-size heat meters, which means that 2-wire sensor sets can be used with advantage.

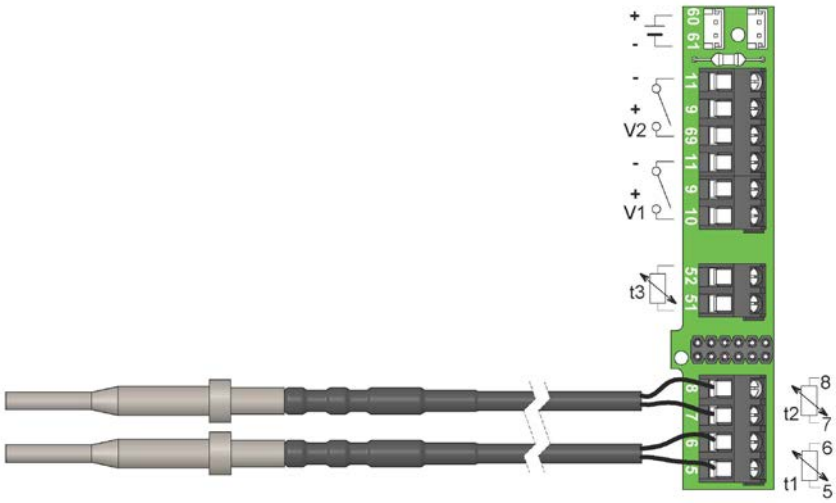

Cable lengths and cross sections of the two sensors which are used as temperature sensor pair for a heat meter must always be identical, and cable sensors must neither be shortened nor extended.

The limitations connected to the use of 2-wire sensor pairs according to EN 1434-2:2015 appear from the table below.

Cable cross section [mm²]	Pt100 sensors		Pt500 sensors	
	Max cable length [m] Subject to EN 1434-2:2015	Temperature increase [K/m] Copper @ 20°C	Max cable length [m] Subject to EN 1434-2:2015	Temperature increase [K/m] Copper @ 20°C
0.25	2.5	0.450	12.5	0.090
0.50	5.0	0.200	25.0	0.040
0.75	7.5	0.133	37.5	0.027
1.50	15.0	0.067	75.0	0.013

Table 6

4-wire sensor set

For installations requiring longer cable lengths than stated in the table above, it is recommended to use 4-wire sensor sets as well as MULTICAL® 603 type 603-B/D/G with 4-wire connection.

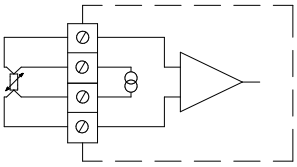

The 4-wire construction uses two conductors for the measuring current and two other conductors for the measuring signal, which means that the construction in theory is uninfluenced by long sensor cables. In practice, cables ought not to be longer than 100 m, and it is recommended to use 4 x 0.25 mm².

The connection cable ought to have an outer diameter of 5-6 mm in order to obtain optimum tightness of both MULTICAL® 603 and the screw-joint for the 4-wire sensor. The isolation material/cover of the cable ought to be selected on the basis of the maximum temperature in the installation. PVC cables are normally used up to 80°C, and for higher temperatures silicone cables are often used.

NB. Ved preset af temperaturer på 4-ledermålere, er det vigtigt at isætte jumpere i klemmerne på de 4-lederfølerindgange der har preset (eksempelvis jumper mellem klemme 4-8 og jumper mellem klemme 7-3 ved preset på t2).

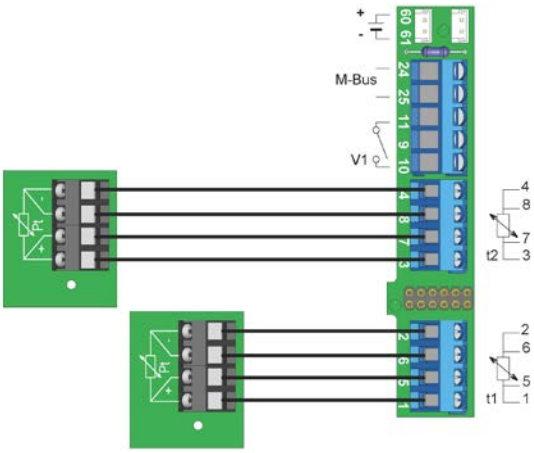

9.2 Sensor types

MULTICAL® 603 can be delivered with both Pt100 and Pt500 sensor pairs. The required sensor pair is selected through the meter's type number. The table below shows the available sensor pairs. See the meter's complete type number in paragraph 3.1.

Description	Pt100/Pt500	Sensor number
2 pairs Short direct 27.5 mm, 1.5 m cable	Pt500	11
2 pairs Short direct 27.5 mm, 3 m cable	Pt500	12
3 pairs Short direct 27.5 mm, 1.5 m cable	Pt500	15
3 pairs Short direct 27.5 mm, 3 m cable	Pt500	16
2 pairs Short direct 38 mm, 1.5 m cable	Pt500	21
2 pairs Short direct 38 mm, 3 m cable	Pt500	22
2 pairs ø5.8 mm pocket sensor, 1.5 m cable	Pt500	31
2 pairs ø5.8 mm pocket sensor, 3 m cable	Pt500	32
2 pairs ø5.8 mm pocket sensor, 5 m cable	Pt500	33
2 pairs ø5.8 mm pocket sensor, 10 m cable	Pt500	34
3 pairs ø5.8 mm pocket sensor, 1.5 m cable	Pt500	35
3 pairs ø5.8 mm pocket sensor, 3 m cable	Pt500	36
3 pairs ø5.8 mm pocket sensor, 5 m cable	Pt500	37
3 pairs ø5.8 mm pocket sensor, 10 m cable	Pt500	38
2 pairs Short direct 27.5 mm, 2 m cable	Pt100	J1
2 pairs Short direct 38 mm, 2 m cable	Pt100	J2
2 pairs ø6 mm with connection head, length 105 mm	Pt100	A1
2 pairs ø6 mm with connection head, length 140 mm	Pt100	A2
2 pairs ø6 mm with connection head, length 230 mm	Pt100	A3
2 pairs ø6 mm with connection head, length 105 mm	Pt500	A4
2 pairs ø6 mm with connection head, length 140 mm	Pt500	A5
2 pairs ø6 mm with connection head, length 230 mm	Pt500	A6
2 pairs ø5.8 mm pocket sensor in pocket with connection head, length 90 mm	Pt500	B1
2 pairs ø5.8 mm pocket sensor in pocket with connection head, length 140 mm	Pt500	B2
2 pairs ø5.8 mm pocket sensor in pocket with connection head, length 180 mm	Pt500	B3

9.3 Short direct EN1434 temperature sensor

The short direct temperature sensor has been designed according to the European standard for heat energy meters EN 1434-2. The temperature sensor is constructed to be mounted directly in the measuring medium, i.e. without sensor pocket, by which you obtain an extremely fast response to temperature changes from e.g. domestic water exchangers.

The sensor is based on two-wire silicone cable. The sensor pipe is made of stainless steel and has a diameter of 4 mm at the point, where the sensor element is placed. Furthermore, it can be directly mounted in many of Kamstrup's flow sensor types, which reduces the installation costs. The short direct sensor is available in a 27.5 mm version, type DS 27.5 mm, and in a 38 mm version, type DS 38 mm. The short direct sensor can be used in PN16 installations with a maximum medium temperature of 150 °C.

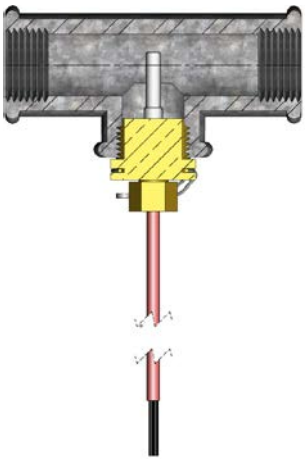

Figure 6

As it appears from *Figure 6*, the short direct sensor DS 27.5 mm can be mounted by means of an R½ or R¾ for M10 nipple in a standard 90° tee.

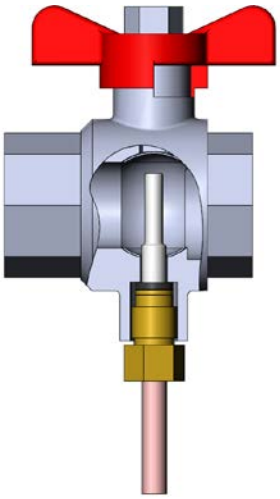

Figure 7

In order to obtain the best possible serviceability during meter replacement, the short direct sensor can be placed in a ball valve with sensor socket, see *Figure 7*.

Ball valves with sensor sockets are available in G½, G¾, G1, all of which fit the DS 27.5 mm sensor as well as in G1¼ and G1½, both fitting the DS 38 mm sensor.

No.	6556-474	6556-475	6556-476
	G½	G¾	G1

No.	6556-526	6556-527
	G1¼	G1½

9.4 ø5.8 mm pocket sensor with connection head

ø5.8 mm pocket sensor with connection head consists of a ø5.8 mm Pt500 temperature sensor, which is connected to a replaceable sensor input via a 2-wire silicone cable. The sensor input is mounted in a sensor pocket with mounted connection head, see figure *8*. Connection of 4-wire cable takes place by leading the cable through the suitable hole in the connection head and mount the 4 wires in the screw terminal on the sensor input.

ø5.8 mm pocket sensor with connection head is available with R½ (conical ½") connection in stainless steel and in lengths of 90, 140 and 180 mm. The outer diameter of the sensor pocket is ø8 mm. The construction with replaceable sensor input permits replacement of sensors without having to cut off the water flow. Furthermore, the wide range of immersion pipe lengths ensures that the sensors can be mounted in all existing pipe dimensions. The stainless steel pockets can be used for mounting in PN25 systems.

A ø5.8 mm pocket sensor with connection head can e.g. be mounted in a tee as shown in *Figure 9*.

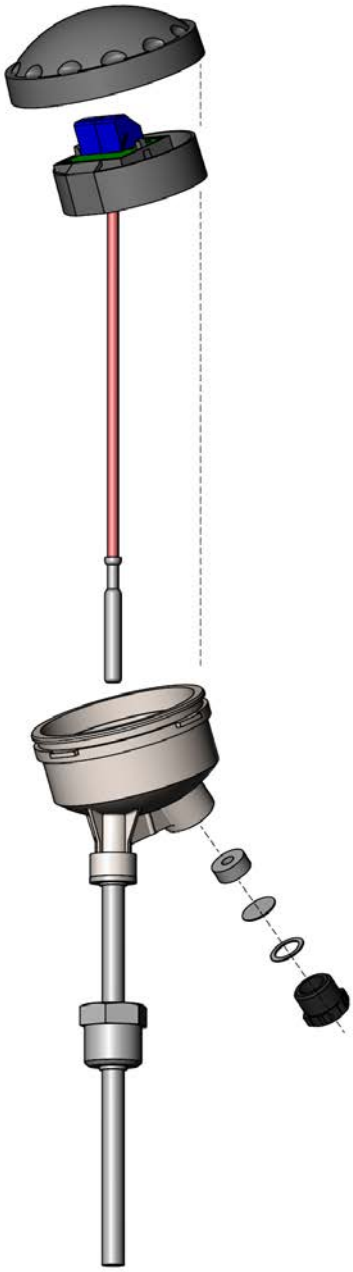

Figure 8

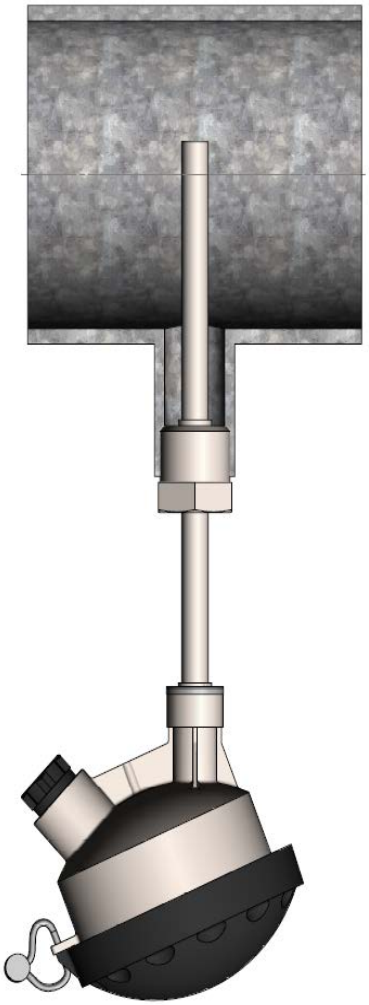

Figure 9

9.5 ø5.8 mm pocket sensor

The ø5.8 mm pocket sensor is a Pt500 cable sensor, which is constructed with 2-wire silicone cable and closed with a ø5.8 mm shrunk on stainless steel tube which protects the sensor element. The steel tube is mounted in a sensor pocket (immersion pipe) which has an outer diameter of ø7.5 mm. Sensor pockets are available with R½ (conical ½") connection in stainless steel and in lengths of 65, 90 and 140 mm. The sensor construction with separate immersion pipe permits replacement of sensors without having to cut off the flow. Furthermore, the wide range of immersion pipe lengths ensures that the sensors can be mounted in all existing pipe dimensions. The stainless steel pockets can be used for mounting in PN25 systems.

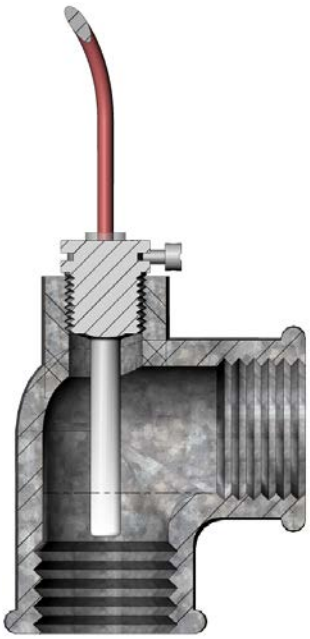

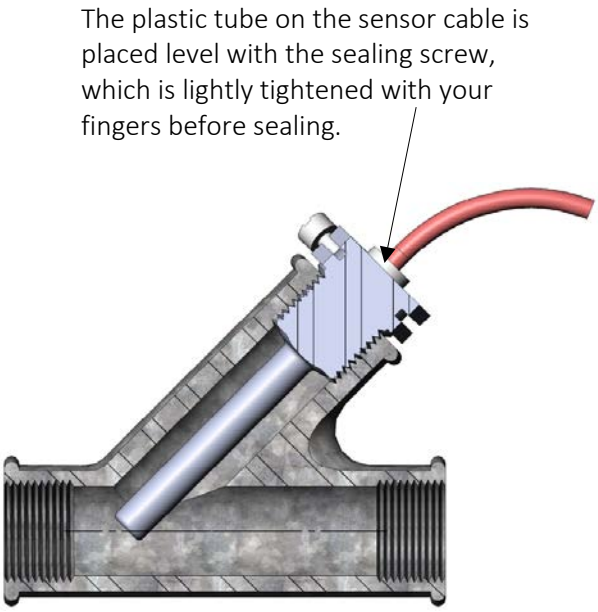

9.6 ø6.0 mm pocket sensor with connection head

ø6 mm pocket sensor with connection head is constructed in accordance with the instructions in EN1434-2. Both the temperature sensor and the belonging sensor pocket are shown in *Figure 10*. The temperature sensor has a diameter of ø6 mm, and at the end of the temperature sensor, a connection head of aluminium of the type DIN Form B is mounted. The various overall lengths EL appear from *Table 7*. The temperature sensor can be delivered both as Pt100 and as Pt500, and when mounted in the belonging sensor pocket, it is approved for use in the temperature range 0-180 degrees Celsius and in PN 40 installations.

The belonging sensor pocket is produced in rustproof steel and has a straight G½" connection thread. The outer diameter is ø8 mm. When mounting, a copper gasket is used for ensuring the necessary density. The various overall lengths L of the sensor pocket appear from *Table 7* where you can also see the belonging overall length EL of the temperature sensor.

Overall length of ø6 mm pocket – L	Overall length of ø6 mm sensor – EL
85 mm	105 mm
120 mm	140 mm
210 mm	230 mm

Table 7

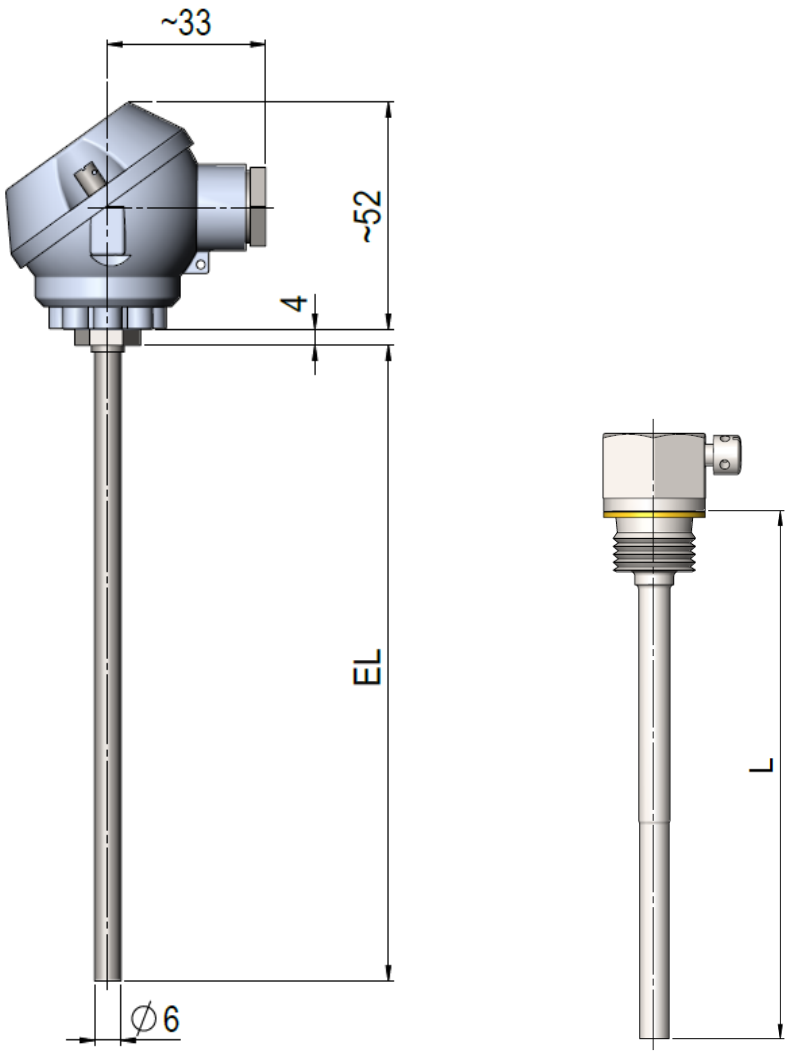

Figure 10

9.7 Resistance tables

All values for the ohmic resistance are laid down in the international standard EN 60 751, applying to both Pt100 and Pt500 temperature sensors. The value of the ohmic resistance of a Pt500 sensor is five times higher than that of a Pt100 sensor. The tables below show resistance values in [Ω] for each degree Celsius for Pt100 and Pt500 temperature sensors respectively:

Pt100										
°C	0	1	2	3	4	5	6	7	8	9
0	100.000	100.391	100.781	101.172	101.562	101.953	102.343	102.733	103.123	103.513
10	103.903	104.292	104.682	105.071	150.460	105.849	106.238	106.627	107.016	107.405
20	107.794	108.182	108.570	108.959	109.347	109.735	110.123	110.510	110.898	111.286
30	111.673	112.060	112.447	112.835	113.221	113.608	113.995	114.382	114.768	115.155
40	115.541	115.927	116.313	116.699	117.085	117.470	117.856	118.241	118.627	119.012
50	119.397	119.782	120.167	120.552	120.936	121.321	121.705	122.090	122.474	122.858
60	123.242	123.626	124.009	124.393	124.777	125.160	125.543	125.926	126.309	126.692
70	127.075	127.458	127.840	128.223	128.605	128.987	129.370	129.752	130.133	130.515
80	130.897	131.278	131.660	132.041	132.422	132.803	133.184	133.565	133.946	134.326
90	134.707	135.087	135.468	135.848	136.228	136.608	136.987	137.367	137.747	138.126
100	138.506	138.885	139.264	139.643	140.022	140.400	140.779	141.158	141.536	141.914
110	142.293	142.671	143.049	143.426	143.804	144.182	144.559	144.937	145.314	145.691
120	146.068	146.445	146.822	147.198	147.575	147.951	148.328	148.704	149.080	149.456
130	149.832	150.208	150.583	150.959	151.334	151.710	152.085	152.460	152.835	153.210
140	153.584	153.959	154.333	154.708	155.082	155.456	155.830	156.204	156.578	156.952
150	157.325	157.699	158.072	158.445	158.818	159.191	159.564	159.937	160.309	160.682
160	161.054	161.427	161.799	162.171	162.543	162.915	163.286	163.658	164.030	164.401

Pt100, IEC 751 Amendment 2-1995-07

Table 8

Pt500										
°C	0	1	2	3	4	5	6	7	8	9
0	500.000	501.954	503.907	505.860	507.812	509.764	511.715	513.665	515.615	517.564
10	519.513	521.461	523.408	525.355	527.302	529.247	531.192	533.137	535.081	537.025
20	538.968	540.910	542.852	544.793	546.733	548.673	550.613	552.552	554.490	556.428
30	558.365	560.301	562.237	564.173	566.107	568.042	569.975	571.908	573.841	575.773
40	577.704	579.635	581.565	583.495	585.424	587.352	589.280	591.207	593.134	595.060
50	596.986	598.911	600.835	602.759	604.682	606.605	608.527	610.448	612.369	614.290
60	616.210	618.129	620.047	621.965	623.883	625.800	627.716	629.632	631.547	633.462
70	635.376	637.289	639.202	641.114	643.026	644.937	646.848	648.758	650.667	652.576
80	654.484	656.392	658.299	660.205	662.111	664.017	665.921	667.826	669.729	671.632
90	673.535	675.437	677.338	679.239	681.139	683.038	684.937	686.836	688.734	690.631
100	692.528	694.424	696.319	698.214	700.108	702.002	703.896	705.788	707.680	709.572
110	711.463	713.353	715.243	717.132	719.021	720.909	722.796	724.683	726.569	728.455
120	730.340	732.225	734.109	735.992	737.875	739.757	741.639	743.520	745.400	747.280
130	749.160	751.038	752.917	754.794	756.671	758.548	760.424	762.299	764.174	766.048
140	767.922	769.795	771.667	773.539	775.410	777.281	779.151	781.020	782.889	784.758
150	786.626	788.493	790.360	792.226	794.091	795.956	797.820	799.684	801.547	803.410
160	805.272	807.133	808.994	810.855	812.714	814.574	816.432	818.290	820.148	822.004

Pt500, IEC 751 Amendment 2-1995-07

Table 9

10 Power supply

MULTICAL® 603 is powered via the two-pole connector in the calculator base. The internal power supply is 3.6 VDC and can be carried out as battery or mains supply via a number of different supply modules from Kamstrup A/S, see the below extract from the type number overview in paragraph 3.1.

Supply modules	
Battery, 1 x D-cell	2
230 VAC high-power SMPS	3
24 VAC/VDC high-power SMPS	4
230 VAC supply module	7
24 VAC supply module	8
Battery, 2 x A-cells	9

All supply modules have been evaluated in connection with the extensive type tests, to which MULTICAL® 603 has been subjected, and it is not permissible to use other supply modules than the ones mentioned above. The supply modules are covered by the CE-marking and the factory guarantee of the meter.

Note: The modules for mains connection must not be connected to direct current (DC), however except for module no. 4 “24 VAC/VDC High power SMPS”.

10.1 Lithium battery, 2 x A-cells

Battery supply for MULTICAL® 603 can consist of a supply module which uses 2 x A-cell lithium batteries (Kamstrup type HC-993-09). No tools are required in order to mount or replace the battery module. Each battery cell has a lithium content of approx. 0.9 g, which excepts the module from being subject to regulations for transportation of dangerous goods.

The battery lifetime depends on factors like ambient temperature and meter configuration, an indication of battery lifetime is thus a realistic estimate.

10.2 Lithium battery, 1 x D-cell

In order to obtain the longest possible battery lifetime, MULTICAL® 603 can be fitted with 1 x D-cell lithium battery (Kamstrup type HC-993-02). No tools are required in order to mount or replace the battery module. The lithium content of the battery cell is approx. 4.5 g, which makes the battery subject to regulations on transportation of dangerous goods, see document 5510-408_DK-GB-DE.

The battery lifetime depends on factors like ambient temperature and meter configuration, an indication of battery lifetime is thus a realistic estimate.

10.3 Battery lifetimes

Overview, estimated lifetime [years], for differently configured MULTICAL® 603 (type 603-E).

Module slot 1 \ Module slot 2		00	10	20	30[1]	11	21	31[1]	50	11, 21, 31[1]	11, 21, 31[1]	11, 21, 31[1]
00	No module	1 x D: 16 years 2 x A: 13 years	1 x D: 16 years 2 x A: 9 years			1 x D: 14 years 2 x A: 6 years				1 x D: 10 years	1 x D: 6 years	
10	Data + 2 pulse inputs (In-A, In-B)	1 x D: 16 years 2 x A: 9 years	1 x D: 15 years 2 x A: 7 years			1 x D: 12 years 2 x A: 5 years				1 x D: 8 years		
20	M-Bus, configurable + 2 pulse inputs (In-A, In-B)											
30[1]	Wireless M-Bus, EU, configurable, 868 MHz + 2 pulse inputs (In-A, In-B)											
11	Data + 2 pulse outputs (Out-C, Out-D)	1 x D: 14 years 2 x A: 6 years	1 x D: 12 years 2 x A: 5 years									
21	M-Bus, configurable + 2 pulse outputs (Out-C, Out-D)											
31[1]	Wireless M-Bus, EU, configurable, 868 MHz + 2 pulse outputs (Out-C, Out-D)											
50	Kamstrup Radio + 2 pulse inputs (In-A, In-B)											
11, 21, 31[1]	Used pulse divider V1/4, PP=73, Avg. Flow ≤ qp/5	1 x D: 10 years	1 x D: 8 years									
11, 21, 31[1]	Used pulse transmitter V1, PP=82 eller 83, Avg. Flow ≤ qp/5	1 x D: 6 years										
11, 21, 31[1]	Used pulse transmitter V1+V2, PP=80											

[1] *The battery lifetime depends on the chosen datagram. See "Datagram description, wireless M-Bus, 5512-2049" for further information.*

Mains supply

Modules, which are not included in the overview, require mains supply. See an overview of supply options for modules in paragraph 11.6.

Conditions for above-mentioned calculations of battery lifetime:

- Wall-mounted calculator (tBAT < 30°C)
- Pulse output: Pulse duration: 32 ms
- Adaptive (2-64 s) or 32 s integration time
- Data reading: Max 1 reading per hour
- M-Bus reading: Max one reading every 10 seconds
- Display on (LCD ON), no background lighting
- An ULTRAFLOW® 54 flow sensor connected with an average flow ≈ qp/4
- Kamstrup Radio reading: Max two readings per month

Note:

- The battery lifetime of MULTICAL® 603-A/B/C/D/G (with integrated M-Bus) corresponds to the battery lifetime of MULTICAL® 603-E with 1 M-Bus module.
- The battery lifetime of MULTICAL® 603-F (with built-in display backlight, turned on 5x15 s/day) is approx. ½ year shorter than the lifetime of the other types.
- The battery lifetime of MULTICAL® 603-E with wM-Bus, two connected ULTRAFLOW® 54 flow sensors and a display that turns off after 4 minutes is 16 year.
- The battery lifetime is typically 14 years in Fast mode (2 s).

Is your application not covered in the above table? Then contact Kamstrup for a specific calculation of the battery lifetime of your application.

10.4 230 VAC supply module

This module is galvanically separated from the 230 VAC supply, the module is adjusted to direct connection to the electricity network. The module includes a double-chamber safety transformer and fulfils double-isolation requirements when the calculator top is mounted on the calculator base. If the supply is interrupted, the module typically keeps the meter powered for a few minutes.

If connected to 230 VAC the whole installation must fulfil current national regulations. Connection/disconnection of the module must be carried out by the meter installer. However, note that work on fixed installations, including any intervention in the fuse box, must be carried out by an authorized electrician.

10.5 24 VAC supply module

This module is galvanically separated from the 24 VAC supply, the module is adjusted to industrial installations and installations powered by a separate 230/24 V safety transformer, for instance mounted in a control panel. The module includes a double-chamber safety transformer and fulfils double-isolation requirements when the calculator top is mounted on the calculator base. If the supply is interrupted, the module typically keeps the meter powered for a few minutes.

The whole installation must fulfil current national regulations. Connection/disconnection of the module can be carried out by the meter installer, whereas installation of the 230/24 VAC safety transformer in a control panel as well as other fixed installations must be carried out by an authorized electrician.

10.6 230 VAC high-power SMPS

This module is galvanically separated from the 230 VAC supply, the module is adjusted to direct connection to the electricity network. The module is constructed as a Switch Mode Power Supply, which complies with the double insulation requirements when the calculator top is mounted on the calculator base. When disconnecting the supply, the module will only keep the meter supplied for a few seconds.

If connected to 230 VAC the whole installation must fulfil current national regulations. Connection/disconnection of the module must be carried out by the meter installer. However, note that work on fixed installations, including any intervention in the fuse box, must be carried out by an authorized electrician.

10.7 24 VDC/VAC high-power SMPS

This module is galvanically separated from the 24 VDC/VAC supply, the module is adjusted to industrial installations and installations powered by a separate 230/24 V safety transformer, for instance mounted in a control panel. The module is constructed as a Switch Mode Power Supply, which complies with the double insulation requirements when the calculator top is mounted on the calculator base. When disconnecting the supply, the module will only keep the meter supplied for a few seconds.

The whole installation must fulfil current national regulations. Connection/disconnection of the module can be carried out by the meter installer, whereas installation of the 230/24 VAC safety transformer in a control panel as well as other fixed installations must be carried out by an authorized electrician.

10.8 Power consumption of mains connected meter

The gained power of meters connected to 24 VAC or 230 VAC appears from the marking on the meter's front. The marking states an average maximum value for the meter's gained power, and over a period of time, the power will not exceed the marking. For instance short periods with data communication require a short-term increase of the energy consumption, whereas longer periods without data communication require less energy. The table shows examples of accumulated yearly consumption for MULTICAL® 603 with various supply types. For battery supplied meters, see paragraph 10.3 about battery lifetimes.

	MULTICAL® 603 connected to 24 VAC incl. transformer (66-99-403)	MULTICAL® 603 connected to 24 VAC excl. transformer	MULTICAL® 603 direct connected to 230 VAC
Gained power [W]	< 1,5 W	< 1 W	< 1 W
Apparent power [VA]	< 6 VA	< 7 VA	< 11.5 VA
Yearly consumption [kWh]	Approx. 13 kWh	Approx. 9 kWh	Approx. 9 kWh

10.9 Transformer 230/24 VAC

The supply modules for 24 VAC are adjusted for use with a 230/24 VAC safety transformer e.g. Kamstrup type 66-99-403, which is mounted in a control panel or another separate encapsulation. Regarding power consumption using a safety transformer in connection with 24 VAC supply modules, see paragraph 10.8 about power consumption of mains-connected meters.

The maximum cable length between the 230/24 VAC transformer, e.g. Kamstrup type 6699-403, and MULTICAL®.

Cable type	Max length
2x0.75 mm^2	50 m
2x1.5 mm^2	100 m

10.10 Supply cables for supply module

MULTICAL® 603 can be supplied with supply cable type H05 VV-F[1] 2 x 0.75 mm^2 to be used for both 24 VAC and 230 VAC, if required by the customer. The supply cable to the meter must not be protected by a fuse larger than the one permitted.

In case of doubt, it is recommended to consult an authorized electrician for an evaluation of how to carry out the installation concerned correctly with regard to safety.

[1] H05 VV-F is the type designation of PVC-isolated cable, with a nominal voltage of 300/500 V and a max temperature of 70 °C. During installation please remember to keep sufficient distance to hot parts of the installation.

10.11 Retrofitting and exchange of supply modules

Supply modules can be freely exchanged within the possible options in the type number of MULTICAL® 603. For example, it can be an advantage, for a period of time, to switch a mains connected supply module to battery supply in a building that has varying mains supply due to restoration or construction work. However, in some cases, battery supply is not a practical option, e.g. in connection with frequent data communication. It is always possible to exchange from battery supply to mains supply without reconfiguration.

The supply type with which Kamstrup A/S delivered MULTICAL® 603 is permanently laser engraved on the meter. When exchanging the installed supply module, the new supply module is delivered from Kamstrup A/S with labels for fixing to MULTICAL® 603. The label must correspond to the installed supply module, see Figure 11. The label is fixed to the area marked on Figure 12 so that it covers any previously imprinted supply description.

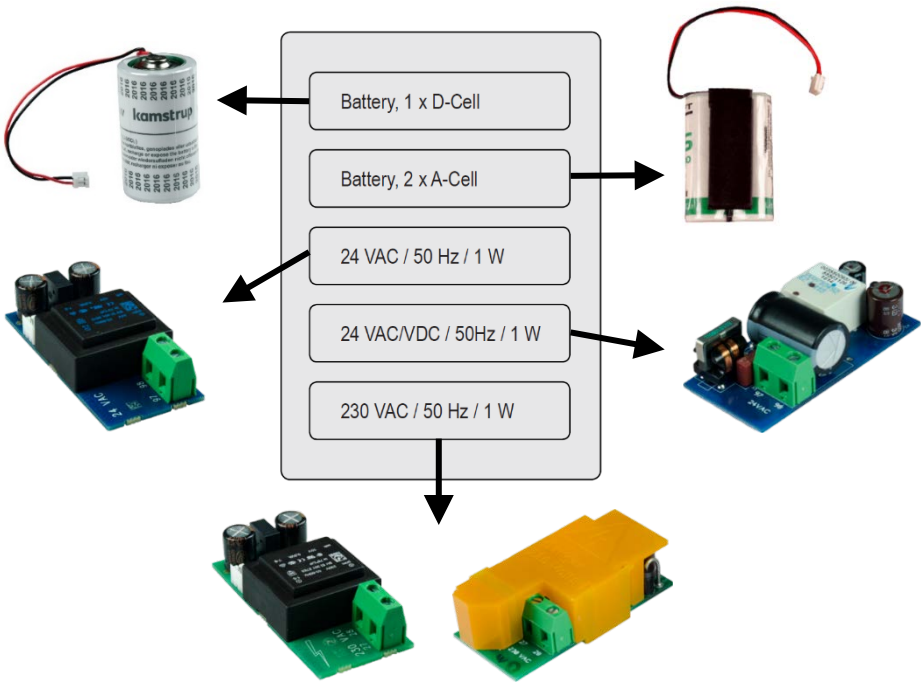

Figure 11 - Choice of correct label for installed supply type

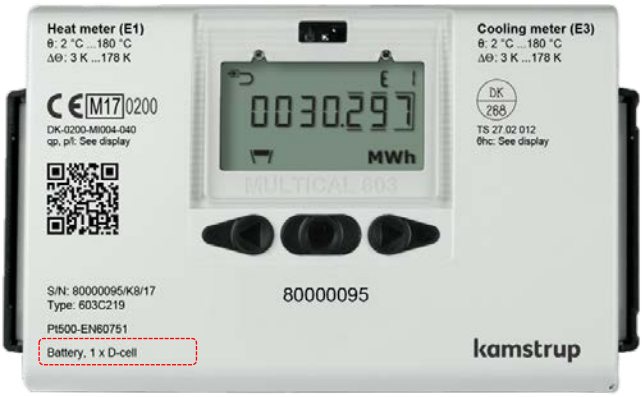

Figure 12 - Correct position of label on MULTICAL® 603

10.12 Data backup in case of interruption of supply

MULTICAL® 603 is fitted with a small lithium battery (BR1632) as backup for the meter's internal clock in case of interruption of the supply. Independent of the mounted supply module the meter is equipped with functionality which saves all current register counts in case the voltage of the internal 3.6 VDC supply is below 3.1 VDC. When the supply is re-established, the meter continues counting from the value, which was saved when the supply was interrupted.

10.13 Danish regulations for mains connection of meters

Installation of mains connected equipment for registration of consumption.
(www.sik.dk, SIK-message Electrical Installations 27/09, February 2009)

The consumption of energy and resources (electricity, heat, gas and water) of the individual consumer is to an increasing extent registered by electronic meters, and often equipment for remote reading and remote control of both electronic and non-electronic meters is used.

General regulations for carrying out installations must be observed. However, the following modifications are permitted:

- If meter or equipment for remote reading or remote control is double insulated, it is not necessary to extend the protective conductor to the connection point. This also applies if the connection point is a plug socket, provided that it is placed in a canning which is sealable or can be opened with key or tool only.

If meter or equipment used for remote reading and remote control is connected to a safety transformer mounted in the panel and direct connected to the branch conductor, no on-off-switch or separate overcurrent protection in either primary or secondary circuit is required, provided that the following conditions are fulfilled:

- The safety transformer must either be inherently short-circuit-proof or fail-safe.
- The conductor of the primary circuit must either be short-circuit-protected by the overcurrent protection of the branch conductor or short-circuit safely run.
- The conductor of the secondary circuit must have a cross section of at least 0.5 mm² and a current value which exceeds the absolute maximum current deliverable by the transformer.
- It must be possible to separate the secondary circuit by separators, or it must appear from the installation instructions that the secondary circuit can be disconnected at the transformer's terminals.

General information
Work on the fixed installation, including any intervention in the group panel, must be carried out by an authorized electrician.
It is not required that service work on equipment comprised by this message as well as connection and disconnection of the equipment outside the panel is carried out by an authorized electrician. These tasks can be carried out by persons or companies, who professionally produce, repair or maintain equipment if only the person carrying out the work has the necessary expert knowledge.

11 Communication

11.1 Integrated M-Bus

Selected variants of MULTICAL® 603 contain an integrated wired M-Bus interface (type 603-A/B/C/D/G). See the meter's complete type number in paragraph 3.1.

The integrated wired M-Bus is designed according to the M-Bus standard EN-13757:2013 and includes the following functions:

- Fixed M-Bus datagram
- Primary and secondary addressing
- Up to 9600 baud communication speed with wild card search and automatic baud rate detection
- Polarity-independent connection
- Load 1 M-Bus Unit Load
- Galvanically separated from the meter’s calculator
- Possibility of changing the primary M-Bus address via M-Bus
- Possibility of setting the meter's clock via M-Bus

Datagram
Heat energy E1
Cooling energy E3
Volume V1
Inlet temperature t1
Outlet temperature t2
Differential temperature t1-t2
Current power
Actual flow
Info codes
Operating hour counter
Error hour counter
Meter type
Serial number

The meter can use both battery and mains supply. In case of battery supply, a reading interval of 10 seconds or higher does not result in a reduction of the meter’s specified battery lifetime. Read more about battery lifetimes in paragraph 10.3

In case of battery supply, it is recommended to use the highest possible communication speed as this results in the lowest power consumption. See paragraph 10.3 for the meters’ battery lifetimes.

The primary address can be set either via the meter’s front keys or via METERTOOL HCW through the optical readout head. By default, the address is the 2-3 last digits of the meter’s customer number.

The secondary address can be set via METERTOOL HCW through the optical readout head. By default, the address is the meter’s customer number.

The M-Bus interface is connected to the M-Bus master on the screw terminals 24 and 25 on the meter's connection PCB.

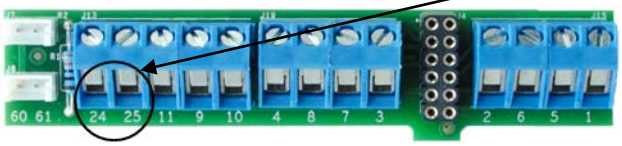

Note It is not possible to read out logger data via integrated M-Bus.

11.2 Communication modules

The module areas in MULTICAL® 603 can contain 2 communication modules that adapts the meter to various applications.

All module types are included in the comprehensive type testing of MULTICAL® 603. Within the framework of the type approval, the CE-declaration and the manufacturer's guarantee no other types of modules than the ones listed below can be used.

Modules with pulse connection are available in two versions:

- with pulse inputs (In-A and In-B) for collection of pulses from e.g. water meters
- with pulse outputs (Out-C and Out-D) for transfer of pulses from e.g. CTS systems

Reconfiguration between pulse inputs and pulse outputs is not necessary in MULTICAL® 603. If a module with pulse inputs is mounted in MULTICAL® 603, the meter is automatically configured for pulse inputs. If a module with pulse outputs is mounted in MULTICAL® 603, the meter is automatically configured for pulse outputs.

It is possible to mount 2 modules, which both have pulse inputs, i.e. there can be a total of 4 pulse inputs.

The pulse inputs from the module on slot 1 are designated In-A1 and In-B1. The inputs from the module on slot 2 are designated In-A2 and In-B2.

Module variants	
Data + 2 pulse inputs (In-A, In-B)	10
Data + 2 pulse outputs (Out-C, Out-D)	11
M-Bus, configurable + 2 pulse inputs (In-A, In-B)	20
M-Bus, configurable + 2 pulse outputs (Out-C, Out-D)	21
M-Bus, configurable + Thermal Disconnect	22
Wireless M-Bus, configurable, 868 MHz + 2 pulse inputs (In-A, In-B) [1]	30
Wireless M-Bus, configurable, 868 MHz + 2 pulse outputs (Out-C, Out-D)[1]	31
Analog output module 2 x 0/4…20 mA	40
Analog input module 2 x 0/4…20 mA	41
PQT Controller	43
LON FT-X3 + 2 pulse inputs (In-A, In-B)	60
BACnet MS/TP + 2 pulse inputs (In-A, In-B)	66
Modbus RTU + 2 pulse inputs (In-A, In-B)	67

[1] *Internal or external antenna*

11.3 Marking of communication modules

All relevant markings appear from each module's protection plate.

A. Connection terminals for connecting external equipment

The terminals are clearly marked with their functions, which are described later in this paragraph.

B. Connection terminals for connecting reading equipment

The terminals are clearly marked with their functions, which are described later in this paragraph. Modules for radio communication are not equipped with terminals for reading equipment, but have antenna connections.

Paragraph 3.2.6 describes the pulse inputs In-A and In-B, and paragraph 3.2.9 describes the pulse outputs Out-C and Out-D.

C. Module identification:

States the module's function, type number and production date.

D. QR code

Contains the module's order and production number, which is used in connection with service and reordering.

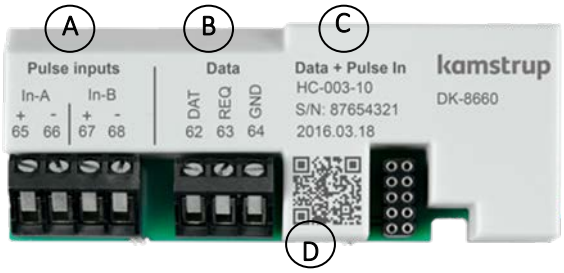

11.4 Modules

11.4.1 Data + pulse inputs (type no.: HC-003-10)

The module has a galvanically separated data port, which interoperates with the KMP protocol (see paragraph 12.3). The data output can for example be used for connecting external communication units or other hard-wired data communication which it is not expedient to carry out via the optical communication on the meter's front.

The data connection is galvanically isolated with opto couplers, which makes it necessary to use data cable type 6699-106 in order to adapt the signal to RS232 level, which is suitable for PCs and other RS-232-based equipment.
See paragraph 12 for information on data sequences and protocols. If the computer does not have a COM-port, data cable with USB type 6699-098 is used.
If a data cable with USB is used, a USB driver must be installed on computers with Windows operating system. The drive can be downloaded from www.kamstrup.com > Downloads > Driver for Kamstrup USB.

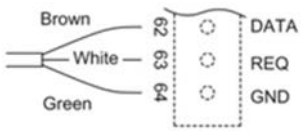

11.4.2 Data + pulse outputs (type no. HC-003-11)

The module has a galvanically separated data port, which interoperates with the KMP protocol (see paragraph 12.3). The data output can for example be used for connecting external communication units or other hard-wired data communication which it is not expedient to carry out via the optical communication on the meter's front.

The data connection is galvanically isolated with opto couplers, which makes it necessary to use data cable type 6699-106 in order to adapt the signal to RS232 level, which is suitable for PCs and other RS-232-based equipment.
See paragraph 12 for information on data sequences and protocols. If the computer does not have a COM-port, data cable with USB type 6699-098 is used.
If a data cable with USB is used, a USB driver must be installed on computers with Windows operating system. The driver can be downloaded from www.kamstrup.com > Downloads > Driver for Kamstrup USB.

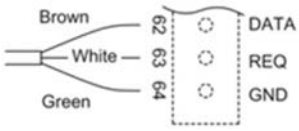

11.4.3 M-Bus + pulse inputs (type no. HC-003-20)

The M-Bus module is powered through the M-Bus network and is thus independent of the meter's internal supply. Two-way communication between M-Bus and energy meter takes place via a digital isolator providing galvanic separation between M-Bus and meter.
The module supports both primary, secondary and enhanced secondary addressing. The module can communicate at communication speeds of 300, 2400, 9600 or 19200 baud and automatically detects the speed used.
The output data package can be configured to include various register combinations by means of the PC-programs METERTOOL HCW and READy Manager.

The module is fitted with two sets of screw terminals for connection to the M-Bus network. The M-Bus cable can thus be looped through the meter so that the use of junction boxes can be avoided. The connection is independent of polarity. The M-Bus cable must be copper twisted pair. Max copper thickness is 1.5 mm^2.

11.4.4 M-Bus + pulse outputs (type no.: HC-003-21)

The M-Bus module is powered through the M-Bus network and is thus independent of the meter's internal supply. Two-way communication between M-Bus and energy meter takes place via a digital isolator providing galvanic separation between M-Bus and meter.
The module supports both primary, secondary and enhanced secondary addressing. The module can communicate at communication speeds of 300, 2400, 9600 or 19200 baud and automatically detects the speed used.
The output data package can be configured to include various register combinations by means of the PC-programs METERTOOL HCW and READy Manager.

The module is fitted with two sets of screw terminals for connection to the M-Bus network. The M-Bus cable can thus be looped through the meter so that the use of junction boxes can be avoided. The connection is independent of polarity. The M-Bus cable must be copper twisted pair. Max cable size is 1.5 mm^2.

11.4.5 M-Bus + Thermal Disconnect (type no. HC-003-22)

This M-Bus module has an output for connection of a 24 VAC, normally open or normally closed, thermal actuator, which is supplied by the module's external power connection. Thermal Disconnect enables remote disconnect of the flow, e.g. in connection with energy management and maintenance or as a result of leakage detection. The Thermal Disconnect system is physically placed on the M-Bus module, but the output is controlled by MULTICAL® by means of commands that are sent via the M-Bus network. The module is power-supplied by the 24 VAC or 230 VAC power supply in MULTICAL®. It is not possible to battery-supply MULTICAL®.

The Thermal Disconnect module requires an external 24 VAC power supply for operating the thermal actuator. Transformer type no. 6699-403 can supply both a 24 VAC-supplied MULTICAL® and a thermal actuator with a power consumption of up to 5 W.

For controlling Thermal Disconnect remotely, the Windows®-based PC program USB Meter Reader is used.

11.4.6 Wireless M-Bus + pulse inputs (type no. HC-003-30)

The wireless M-Bus module has been designed for use in both READy Converter Wireless M-Bus reading systems and Wireless M-Bus network systems, which operate within the unlicensed frequency band in the 868 MHz area.

The communication protocol is C-mode or T-mode according to the standard EN13757-4. The wireless M-Bus module supports both individual and common encryption keys, the common encryption key, however, on request only. The modules are available with connection for both internal and external antenna.

The output data package can be configured to include various register combinations by means of the PC-programs METERTOOL HCW and READy Manager.

11.4.7 Wireless M-Bus + pulse outputs (type no.: HC-003-31)

The wireless M-Bus module has been designed for use in both READy Converter Wireless M-Bus reading systems and Wireless M-Bus network systems, which operate within the unlicensed frequency band in the 868 MHz area.

The communication protocol is C-mode or T-mode according to the standard EN13757-4. The wireless M-Bus module supports both individual and common encryption keys, the common encryption key, however, on request only. The modules are available with connection for both internal and external antenna.
The output data package can be configured to include various register combinations by means of the PC-programs METERTOOL HCW and READy Manager.

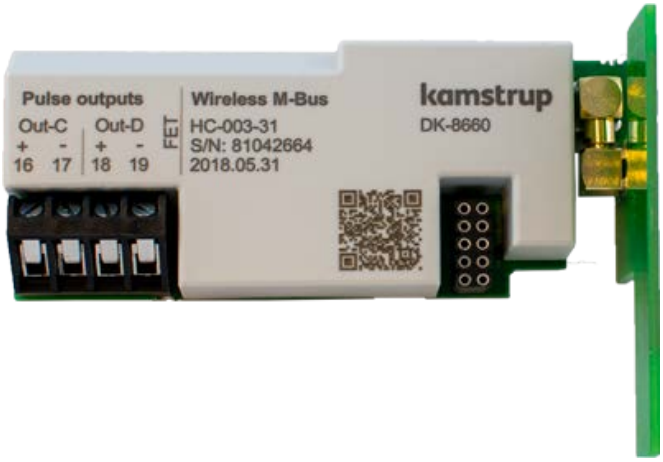

11.4.8 Analog output module (type no.: HC-003-40)

The analog outputs are primarily used in connection with building automation and in industrial applications. Here, the analog outputs are often used for transmission of information, which is only to be shown on external equipment, typically PLC or the like. The analog outputs must only be able to update values quickly as they are generally used in applications for regulation based on flow, energy or temperatures. The two analog outputs can scale individually to adapt values such as flow, power or temperatures to 0...20 mA or 4...20 mA current.

The module is power-supplied by the 24 VAC or 230 VAC power supply in MULTICAL®. It is not possible to battery-supply MULTICAL®.

The analog output module requires an external 24 VAC/DC supply for controlling the load of the circuits, e.g. Kamstrup 230/24 VAC transformer 6699-403.

11.4.9 Analog input module (type no.: HC-003-41)

The analog input module is connected to external sensors and collects measuring values to be logged and shown in the MULTICAL® 603 display. The module can be connected to sensors with either 0..20mA or 0..10V signals.
Each input can be configured with measuring range, measuring unit and decimal point. The update interval can be set from 1 second to 1 hour.
The module is supplied by the meter's built-in 24VAC or 230VAC power supply. MULTICAL® cannot be battery-supplied through an analog input module.
The analog input module must use an external 24VAC/DC power supply for supplying the connected sensors, e.g. Kamstrup 230/24 VAC transformer 6699-403.

11.4.10 PQT Controller (type no.: HC-003-43)

HC-003-43 is a versatile controlling module for use in MULTICAL® energy meters. The PQT module is for applications optimizing energy consumption. The PQT module works together with the MULTICAL® energy meter and reads the meter's flow, power, temperature difference and outlet temperature. The read data is used together with the limit values configured in the module to control the connected motor valve.

The controller is fully programmable and can be selected to regulate according to one or more monitoring parameters. Normally, a power control that is controlled only according to a fixed power limit is desired. It is also possible to choose to limit according to a fixed maximum flow.

In addition to power and flow, the controller can also be configured to monitor the temperature difference and/or outlet temperature and thus further limit the final flow.

Likewise, PQT Controller can be adjusted in such a way that a minimum flow is always ensured so that frost bursts can be avoided.

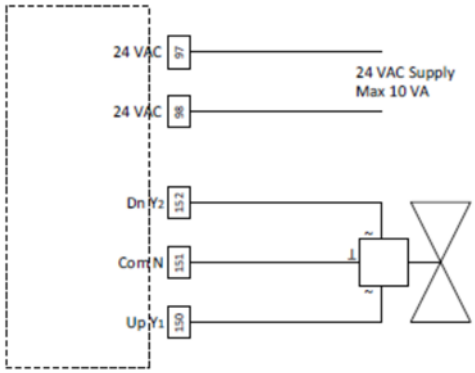

Typical PQT installation:

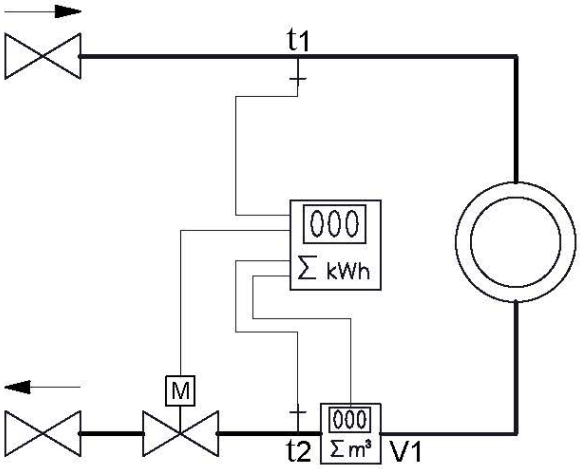

11.4.11 LON FT-X3 + 2 pulse inputs (type no. HC-003-60)

The LON FT-X3 module is designed for use in free topology communication TP/FT-10. The module is compatible with LONWORKS® 2.0 and supports high-speed communication up to 78600 baud.

The LON module enables the integration of the energy meter in building automation systems or in industrial applications. The LON module is delivered with bar codes with imprinted LON Node ID to ease the commissioning.

The module is power-supplied by the 24 VAC or 230 VAC power supply in MULTICAL®. The power supply must be in the high-power version. It is not possible to battery-supply MULTICAL®.

11.4.12 BACnet MS/TP + 2 pulse inputs (type no. HC-003-66)

The BACnet MS/TP module is designed for use in free topology communication. The module is compatible with ASHRAE 135 and supports high-speed communication up to 76800 baud.

The BACnet module enables the integration of the energy meters in building automation systems or in industrial applications.

The BACnet module is BACnet-certified and registered in the BTL list.

The module is power-supplied by the 24 VAC or 230 VAC power supply in MULTICAL®. MULTICAL® cannot be battery-supplied.

11.4.13 Modbus RTU + 2 pulse inputs (type no. HC-003-67)

The Modus RTU module is designed for use in free topology communication. The module is compatible with Modbus implementation guide V1.02 and supports high-speed communication up to 115200 baud.

The Modbus module enables the integration of the energy meter in building automation systems or in industrial applications.

The Modbus module is MBS-verified.

The module is power-supplied by the 24 VAC or 230 VAC power supply in MULTICAL®. MULTICAL® cannot be battery-supplied.

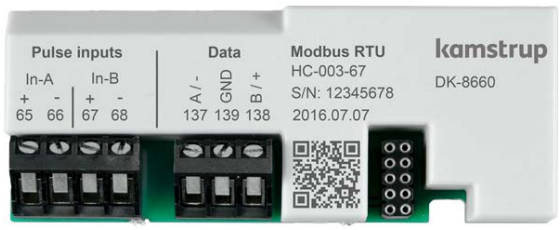

11.5 Mounting of antenna

The wireless M-Bus modules must be connected to an internal or an external antenna.

When mounting an external antenna, you must make sure that the antenna cable is arranged as shown below to prevent it from being damaged when the calculator is assembled. Before exchanging or mounting modules, the supply to the meter must be disconnected. The same applies to the mounting of an antenna.

Wireless M-Bus module with internal antenna

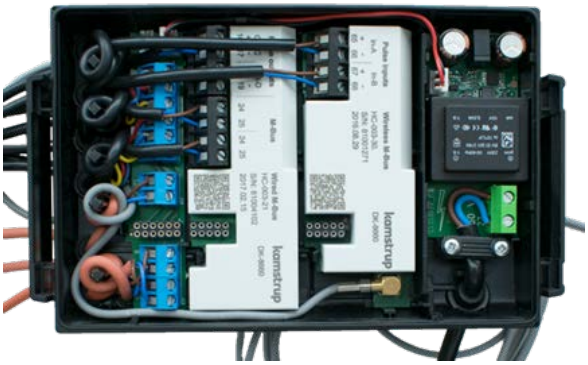

Wireless M-Bus module with external antenna

11.6 Retrofitting modules

Modules for MULTICAL® 603 are also supplied separately for retrofitting. The modules are factory-configured and ready for installation. However, some modules require final individual configuration, which can be carried out by means of the PC program METERTOOL HCW (read more about METERTOOL HCW in paragraph 14). *Before exchanging or mounting modules, the supply to the meter must be disconnected. The same applies to the mounting of an antenna.*

Type No.	Module	Possible configuration after installation
10	Data + 2 pulse inputs (In-A, In-B)	Pulse figure and pre-setting of In-A and In-B can be changed via METERTOOL HCW.
11	Data + 2 pulse outputs (Out-C, Out-D)	Pulse duration of Out-C and Out-D is changed via METERTOOL HCW.
20	M-Bus + 2 pulse inputs (In-A, In-B)	Pulse figure and preset of In-A and In-B can be changed via METERTOOL HCW. Primary and secondary M-Bus addresses can be changed via METERTOOL or M-Bus. The register contents of the M-Bus data package can be changed via METERTOOL HCW and READY Manager.
21	M-Bus + 2 pulse outputs (Out-C, Out-D)	Pulse duration of Out-C and Out-D is changed via METERTOOL HCW. Primary and secondary M-Bus addresses can be changed via METERTOOL or M-Bus. The register contents of the M-Bus data package can be changed via METERTOOL HCW and READY Manager.

22	M-Bus + Thermal Disconnect	Primary and secondary M-Bus addresses can be changed via METERTOOL or M-Bus. The register contents of the M-Bus data package can be changed via METERTOOL HCW and READY Manager.
30	Wireless M-Bus + 2 pulse inputs (In-A, In-B)	Pulse figure and pre-setting of In-A and In-B can be changed via METERTOOL HCW. The register contents of the M-Bus data package can be changed via METERTOOL HCW and READY Manager.
31	Wireless M-Bus + 2 pulse outputs (Out-C, Out-D)	Pulse figure and pre-setting of Out-C and Out-D can be changed via METERTOOL HCW. The register contents of the M-Bus data package can be changed via METERTOOL HCW and READY Manager.
40	Analog output module, with 2 x 0/4…20 mA	Output as 0…20 mA or 4…20 mA. Output from one of the following registers: Flow V1, power, inlet temperature t1, outlet temperature t2, differential temperature t1-t2. The above values can be changed via METERTOOL HCW and are individual for each of the two outputs.
41	Analog input module, with 2 x 0… 20 mA or 0...10 V	Input as 0…20 mA or 0…10V. Input are read by MULTICAL® for logging and display reading. The two inputs can be configured with measuring ranges, measuring units and decimal points. These can be changed with METERTOOL HCW.
43	PQT Controller	Module with output for controlling of three-point motor-operated valve. The module is used for regulating power, flow and temperature. The limit values and control parameters of the controller can be changed with METERTOOL HCW.
60	LON FT-X3 + 2 pulse inputs (In-A, In-B)	Pulse figure and pre-setting of In-A and In-B can be changed via METERTOOL HCW.
66	BACnet MS/TP + 2 pulse inputs (In-A, In-B)	Pulse figure and pre-setting of In-A and In-B can be changed via METERTOOL HCW. The MAC address can be changed with METERTOOL HCW.
67	Modbus RTU + 2 pulse inputs (In-A, In-B)	Pulse figure and pre-setting of In-A and In-B can be changed via METERTOOL HCW. The RTU slave address can be changed with METERTOOL HCW.

11.7 Supply of modules

Module slot 1 \ Module slot 2		00	10	20	30	50	11	21	11	22	40	41	43	66	67	60
00	No module															
10	Data + 2 pulse inputs (In-A, In-B)															
20	M-Bus, configurable + 2 pulse inputs (In-A, In-B)															
30	Wireless M-Bus, EU, configurable, 868 MHz + 2 pulse inputs (In-A, In-B)															
50	Kamstrup Radio (low-power) + 2 pulse inputs (In-A, In-B)															
11	Data + 2 pulse outputs (Out-C, Out-D)															
21	M-Bus, configurable + 2 pulse outputs (Out-C, Out-D)															
11	Data + 2 pulse outputs (Out-C, Out-D), Used pulse transmitter (V1+V2)															
22	M-Bus, configurable + w/Thermal Disconnect															
40	Analog output module 2 x 0/4…20 mA															
41	Analog input module 2 x 0/4…20 mA															
43	PQT Controller															
66	BACnet MS/TP (RS-485) + 2 pulse inputs (In-A, In-B)															
67	Modbus RTU (RS-485) + 2 pulse inputs (In-A, In-B)															
60	LonWorks + 2 pulse inputs (In-A, In-B)															

Battery supply

Mains supply

High-power SMPS

Overview of battery lifetimes, estimated lifetime [years], of differently configured MULTICAL® 603 is shown in paragraph 10.3.

12 Data communication

12.1 MULTICAL® 603 data protocol

Internal data communication in MULTICAL® 603 is based on the Kamstrup Meter Protocol (KMP) which provides a fast and flexible reading structure and also fulfils future requirements to data reliability.

The KMP protocol is used in all Kamstrup consumption meters launched from 2006 onwards. The protocol is used for the optical reading head and via plug pins for the module area. Thus, modules with e.g. M-Bus interface use the KMP protocol internally and the M-Bus protocol externally.

Integrity and authenticity of data

All data parameters include type, measuring unit, scaling factor and CRC16 checksum.
Every produced meter includes a unique identification number.

12.2 Optical readout head

The optical reading head can be used for data communication via the optical interface. The optical readout head is placed on the front of the calculator just above the IR-diode as shown in the figure below. Note that the optical readout head includes a very strong magnet, which should be protected by means of an iron disc when not in use.

Various variants of the optical readout head appear from the list of accessories (see paragraph 3.1.1).

Power-saving in connection with the optical readout head

In order to limit the power consumption of the circuit around the IR-diode, the meter includes a magnet sensor which switches off the circuit when there is no magnet close to it.

12.3 Data protocol

Utilities and other relevant companies who want to develop their own communication drivers for the KMP protocol can order a demonstration program in C# (.net-based) as well as a detailed protocol description (in English language).

13 Test and calibration

MULTICAL® 603 can be tested as a complete energy meter or as a split meter depending on the available equipment.

The high-resolution test registers are read from the display, via serial data reading or via high-resolution pulses.

When testing a split meter, a separate test of the calculator by means of Kamstrup calibration equipment for MULTICAL® 603 and METERTOOL HCW can be carried out. Flow sensor and temperature sensors are tested separately too.

Integration speed

When configuring the meter, you select the integration mode, which the meter can use under “Integration mode >L<”. Irrespective of the selected Integration mode, the meter can be set to “Test mode” by breaking the test seal and activating the test switch. In “Test mode”, the meter uses a 2-second integration interval just as in “Fast mode (2 s)”. The meter remains in test mode until the supply is disconnected and the meter is restarted, or for 9 hours.

When the meter is in “Test mode”, you can initiate an auto-integration by making a forced dial-up (both arrow keys are pressed until “CALL” is shown in the display).

Integration mode	Interval	L=
Adaptive mode	2-64 s	1
Normal mode	32 s.	2
Fast mode	8 s.	3
Fast mode	2s	4
Adaptive mode	2-64 s	5
Normal mode	32 s.	6
Fast mode	8 s.	7

Temperature calibration

The temperature measurement is adjusted and calibrated during the production process and it does not require further adjustment in the meter’s lifetime. The temperature circuit can only be adjusted in our factory.

Pulse interface

During test, either optical readout head with USB plug (6699-099) for serial reading of high-resolution energy and volume registers or Pulse Interface (6699-143) with optical readout head and connection unit for high-resolution pulse outputs is used. Do not forget that the meter must be in test mode.

Verification pulses

When Pulse Interface type 6699-143 is connected to power supply or battery, the unit is placed on the meter, and the meter is in test mode, the following pulses are transmitted:

- High-resolution energy pulses:

[1] (0.001 kWh/pulse to 0.01 MWh/pulse) on terminals 7 and 8

- High-resolution volume pulses:

[1] (0.01l/pulse to 0.1 m^3/pulse) on terminals 4 and 5

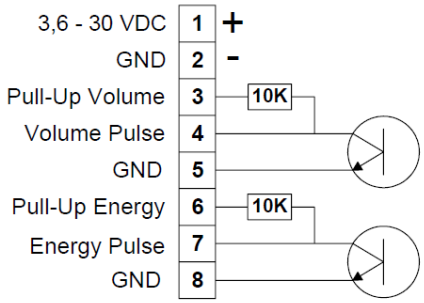

Pulse Interface 6699-143, technical data

Supply voltage	3,6 – 30 VDC
Current consumption	< 15 mA
Pulse outputs	< 30 VDC < 15 mA
Pulse duration	3.9 ms

[1] See *table 2* paragraph 6.4

Use of high-resolution pulses

The high-resolution energy/volume pulses can be connected to the test stand used for calibrating the meter or to Kamstrup Pulse Tester, type 6699-279, as shown in the drawing below.

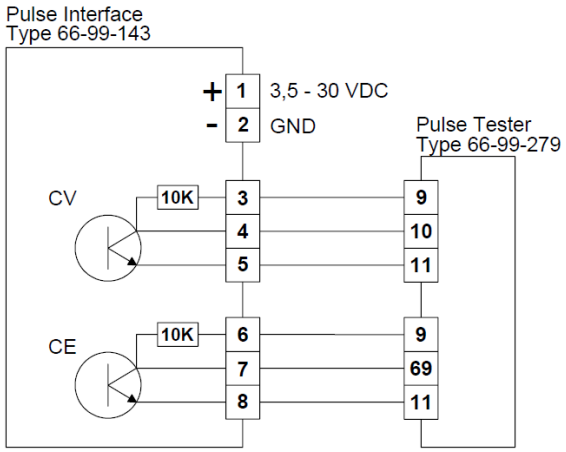

High-resolution registers for calibration and verification

When the meter is calibrated or verified on equipment such as NOWA, it is necessary to use a higher resolution of energy and volume than shown in the display to reduce the test time.

These high-resolution registers are described in the KMP data protocol description, which can be requested from Kamstrup.

True energy calculation

During test and verification, the heat meter's energy calculation is compared to the "true energy", which is calculated according to the formula of EN1434-1:2007, EN1434-1:2015 and OIML R75:2002.

The below-mentioned energy calculator can be supplied electronically by Kamstrup A/S.

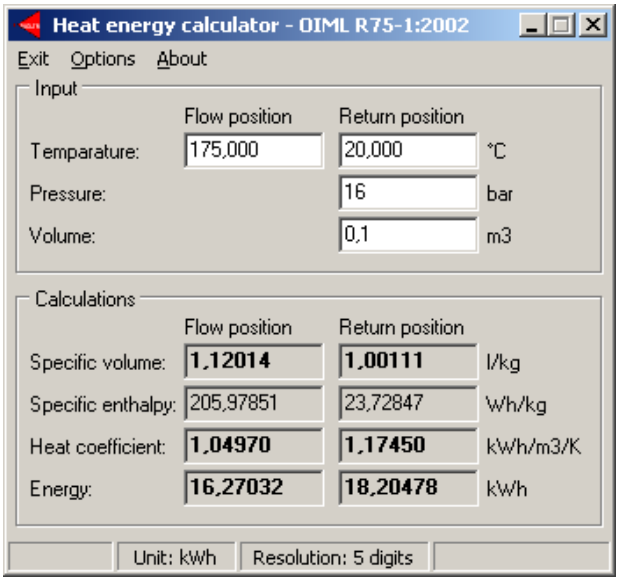

The true energy at the most frequently used verification points is indicated in the table below:

t1 [°C]	t2 [°C]	ΔΘ [K]	Inlet [Wh/0.1 m³]	Outlet [Wh/0.1 m³]
42	40	2	230.11	230.29
43	40	3	345.02	345.43
53	50	3	343.62	344.11
50	40	10	1146.70	1151.55
70	50	20	2272.03	2295.86
80	60	20	2261.08	2287.57
160	40	120	12793.12	13988.44
160	20	140	14900.00	16390.83

14 METERTOOL HCW

14.1 Introduction

Kamstrup's software product “METERTOOL HCW” (6699-724) is used for configuration of MULTICAL® 603 as well as other Kamstrup heat, cooling, water and flow meters. In connection with MULTICAL® 603, the program is used for reconfiguration, reset, auto-integration and calibration.

14.2 System requirements

METERTOOL HCW requires minimum Windows XP SP3, Windows 7, Home Premium SP1 or newer as well as Windows Internet Explorer 5.01 or a newer version.

Minimum:	1 GB RAM	Recommended:	4 GB RAM
	10 GB free hard disk		20 GB free hard disk
	Display resolution 1280x720		1920 x 1080
	USB-connection		
	(Printer installed)		

Administrator rights to the PC used are required in order to install and use METERTOOL HCW. The program must be installed under the user login that will later use the program.

14.3 Interface

For the connection between the meter and the PC, on which METERTOOL HCW is installed, the optical eye with USB connection (6699-099) or alternatively the optical eye with COM-Port (6699-102) is used. Alternatively, a Bluetooth optical eye can be used in cases where wireless connection is preferred (6696-005).

Figure 13: MULTICAL® 603 with USB data cable (6699-099)

USB drivers for Kamstrup USB units must be installed before the connection between PC and METERTOOL HCW is established.

To configure the meter, it must be in the SETUP loop, except from when configuring the meter's primary addresses. If MULTICAL® 603 has not been commissioned yet and is in transport state, it can be programmed without manually being changed to the SETUP loop. Connecting MULTICAL® 603 to METERTOOL HCW, the meter automatically switches to the SETUP loop if the SETUP loop is available.

If MULTICAL® 603 has been commissioned before configuration, the access to the SETUP loop must be opened before programming can start. This is done by separating the calculator's top and base, which requires that the installation seal is broken.

Note: The installation seal must be broken by an electrician who can re-establish the installation seal correctly after programming.

The meter remains in the SETUP loop for 4 minutes after which it reverts to the energy reading if no further action is taken. Activation of any front key extends the period (in SETUP loop) by four more minutes. This can be repeated several times.

14.4 Installation

Please follow these instructions in order to install METERTOOL HCW on a PC:

1. Check that the system requirements are fulfilled.
2. Close other open programs before starting the installation.
3. Download the METERTOOL software from Kamstrup's FTP server and follow the program's directions. A license is obtained from Kamstrup's service department upon an online application on Kamstrup's website: http://static.kamstrup.dk/hardlink/metertool/downloads/dk/index.php
4. During installation, METERTOOL HCW detects whether a USB driver for the optical eye has been installed. If not, you will be asked whether you want to install it. You must answer yes to this question.
5. When the installation has been completed, the icon "METERTOOL HCW" will appear in the menu "All Programs" under 'KAMSTRUP METERTOOL' (or from the menu "Start" for Windows XP). Furthermore, a link is created on your desktop. Double-click the link or icon to open METERTOOL HCW.

14.5 Settings

This paragraph describes the setting options in METERTOOL HCW. It is found under “Settings”.

Select language

The program language can be changed to 9 different languages: Danish, German, English, French, Polish, Russian, Czech, Swedish and Spanish.

Adjust COM port

The COM port can be selected manually instead of the automatically selected default setting.

Update program

METERTOOL HCW can be updated in this menu if a newer revision is available on Kamstrup's FTP server.

Update database

The METERTOOL databases can be updated in this menu if newer revisions are available on Kamstrup's FTP server.

Save or restore databases

Verification data and equipment data can be saved and backed up by means of this menu.

Install the USB-driver

By means of this key you can manually install the USB driver for the optical eye.

Help button

Contact The contact button provides links to Kamstrup's website and mailbox.

Output Displays the last used functions in the program.

User manual Link to the meter’s user manual on Kamstrup’s website.

About button

List of METERTOOL HCW program versions and revision numbers as well as all subprograms including type numbers and revision numbers for the entire METERTOOL HCW program.

14.6 How to use METERTOOL HCW

This paragraph describes the setup, connection, loading of meter details as well as reconfiguration of the meter. A number of menu points can be accessed under “Meter”.

Before starting the program, the optical eye must be connected and placed in the middle of the calculator's top front, either by holding it against the two plastic stays by hand or by using holder (3026-909) intended for this purpose.

When the program is started for the first time, you will be asked to select basic or advanced mode. The program remembers this choice next time you start the program, but it can always be changed.

In basic mode, date and time can be adjusted and meter details can be read. In advanced mode, you also have access to other more advanced functions. See below.

Basic mode	Meter information
	Meter configuration
	Change of date and time
Advanced mode	Meter information
	Meter configuration
	Change of date and time
	Communication setup
	Module setup
	Presetting In-A and In-B
	Reset
	Auto-integration
	Calibration

14.7 Auto-integration

By means of the function auto-integration, the meter can be tested and verified.
During auto-integration, you must either connect known precision resistors to the meter's temperature sensor inputs or place the temperature sensors in precisely controlled baths.
Thus, you can simulate energy consumption and verify the meter's energy calculation. Auto-integration counts in two separate high-resolution auto-integration energy registers ("E1HighRes_autoint" and "E3HighRes_autoint"), depending on energy type. These registers are reset after each auto-integration. To be able to carry out an auto-integration, it is necessary to break the installation seal and separate the calculator top and bottom. See paragraph 4.8 for further information about sealing and paragraph 6.3 regarding the SETUP loop. An auto-integration can always be carried out by separating calculator top and base, even if the configuration log is full (i.e. 25 times).

Note: Auto-integration does not influence the legal registers E1 and E3.

Optical interface ON/OFF

With this function, communication via the optical interface can be deactivated permanently. If communication via the optical interface is to be reactivated at a later time, the calculator top and base must be separated and reassembled, which enables communication via the optical interface for 4 minutes. In this period of time, it is also possible, via METERTOOL HCW, to reactivate the communication via the optical interface permanently.

The MULTICAL® 603 display shows the status of this function, at segment ③, see the figure below.
Segment off = Communication via the optical interface is activated.
Segment on: Communication via the optical interface is deactivated.
Segment flashes: Communication via the optical interface is temporarily active for 4 minutes after the calculator top and base have been separated. In this period of time, it is possible via METERTOOL HCW to reactivate the communication via the optical interface permanently. For further information about status indicators in the MULTICAL® 603 display, see paragraph 6.

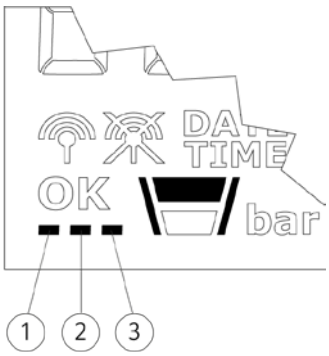

15 Approvals

15.1 Type approvals

MULTICAL® 603 is type-approved according to MID on the basis of EN 1434-4:2015.

MULTICAL® 603 has a national Danish cooling approval, TS 27.02 012, according to BEK 1178 based on EN1434:2015.

15.2 The Measuring Instruments Directive

MULTICAL® 603 is available with CE-marking according to MID (2014/32/EC). The certificates have the following numbers:

B-Module: DK-0200-MI004-040

D-Module: DK-0200-MID-D-001

16 Troubleshooting

MULTICAL® 603 has been constructed with a view to quick and simple installation as well as long and reliable operation at the heat consumer.

Should you, however, experience an operating problem, the table below can be used for troubleshooting.

Should it be necessary to repair the meter, it is recommended only to replace battery, temperature sensors and communication modules. Alternatively, the whole meter should be replaced.

Major repairs must be made by Kamstrup A/S.

Before sending us a meter to be repaired or checked, please use the error detection table below to help you clarify the possible cause of the problem.

Symptom	Possible reason	Proposal for correction
No display function (empty display)	Power supply missing	Change battery or check mains supply. Does the supply plug provide 3.6 VDC?
No energy accumulation (e.g. MWh) and volume (m^3)	Read “INFO” in the display	Check the error indicated by the info code (see paragraph 7.7)
	If “INFO” = 00000000	Check that the flow direction matches the arrow on the flow sensor.
	If “INFO” = xXxxxxxx, xxXxxxxx or xXXxxxxx.	Consult the “INFO” overview (paragraph 7.7) and check the temperature sensors. If defective, replace the sensor pair.
Accumulation of volume (m^3) but not of energy (e.g. MWh)	Read “INFO” in the display	“INFO” = x99xxxxx means invalid temperature difference (t1-t2)
	Inlet and outlet sensors have been interchanged in either installation or connection	Mount the sensors correctly
	Heat/cooling cut-off θ_{hc} has been configured to a too low value	Reconfigure θ_{hc} at a suitable value, or configure θ_{hc} at 250 °C, thereby disconnecting the cut-off function.
Incorrect accumulation of volume (m^3)	Faulty configuration of pulse figure	Check that the pulse figure on the flow sensor matches the calculator.
Incorrect temperature reading	Defective temperature sensor Insufficient installation	Replace sensor pair Check the installation
Temperature indication a little too low, or accumulation of energy (e.g. MWh) slightly too low	Bad thermal sensor contact Heat dissipation Too short sensor pockets	Make sure that the sensors are pushed to the bottom of the sensor pockets Insulate sensor pockets Replace by longer pockets
The optical interface does not respond.	Optical interface disabled Optical readout head is positioned incorrectly	See the heart beat and status indication in paragraph 6. Turn the optical readout head so that the cable turns upwards.

17 Disposal

Kamstrup A/S holds an environmental certification according to ISO 14001, and as part of our environment policy we use materials which can be recovered environmentally correctly to the greatest possible extent.

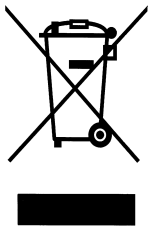

As from August 2005 Kamstrup's heat meters are marked according to EU Directive 2012/19/EU and the standard EN 50419.

The purpose of the marking is to inform our customers that the heat meter cannot be disposed of as ordinary waste.

- Disposal

Kamstrup A/S accept end-of-life MULTICAL® 603 for environmentally correct disposal according to previous agreement. The disposal arrangement is free of charge to the customer, except for the cost of transportation to Kamstrup A/S or the nearest disposal system.

The meters should be disassembled as described below and the separate parts handed in for approved destruction. The batteries must not be exposed to mechanical impact and the lead-in wires must not be short-circuited during transport.

Item	Material	Recommended disposal
2 x A lithium cells	Lithium and thionyl chloride, approx. 2 x 0.96 g lithium	Approved deposit of lithium cells
D-cell lithium battery	Lithium and thionyl chloride, >UN 3090<: approx. 4.5 g lithium	Approved deposit of lithium cells
PCBs in MULTICAL® 603 (LC-display to be removed)	Coppered epoxy laminate, components soldered on	PCB scrap for metal recovery
LC-display	Glass and liquid crystals	Approved processing of LC-displays
Cables for flow sensor and temperature sensors	Copper with silicone mantle	Cable recovery
Top cover	PC + 10 % GF	Plastic recycling or combustion
PCB case and connecting base	PC + 10 % GF with TPE gaskets	Plastic recycling or combustion
Wall bracket	PC + 20 % glass	Plastic recycling or combustion
Meter case Clamp plate Transducer/reflector	> 84 % brass or stainless steel, material no. 1.408 < 15 % common steel (St 37) < 1 % stainless steel	Metal recovery
Packing	Environmental cardboard	Cardboard recycling
Packing	Polystyrene	EPS recovery

Please send any questions you may have regarding environmental matters to:

Kamstrup A/S
Att.: Quality and environmental dept.
Fax: +45 89 93 10 01
info@kamstrup.com

18 Documents

	Danish	English	German	Russian
Technical description	5512-2028	5512-2029	5512-2030	5512-2031
Data sheet	5810-1515	5810-1516	5810-1517	5810-1522
Installation and user's guide	5512-2231	5512-2231	5512-2231	5512-2231

These documents are currently updated. Find the latest edition at http://products.kamstrup.com/index.php.