kamstrup

flowIQ® 3100

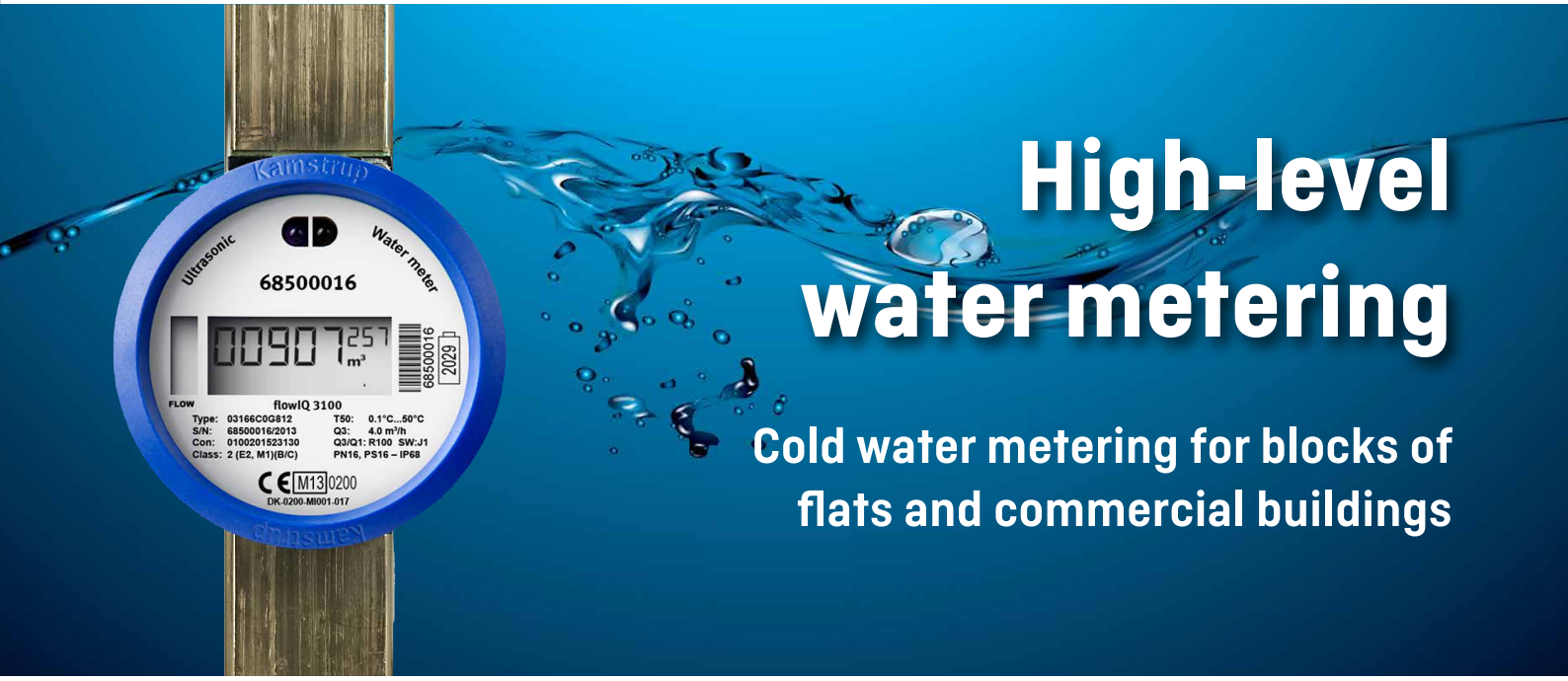

High-level water metering

Cold water metering for blocks of flats and commercial buildings

Ultrasonic water meter

flowIQ® 3100 makes sure that the consumption of every single litre of water is accurately registered and billed. The meter is vacuum sealed and IP68 type tested. This makes it suitable for fast and safe installation in meter wells too for remote reading via the built-in Wireless M-Bus data communication. The meter has no moving parts and is thus resistant to wear and impurities in drinking water. In combination with the meter's longevity, including up to 16 years' battery life, and minimum operating costs you are asured the most cost-effective solution.

Smart design

gives you freedom to install the compact flowIQ® 3100 in all operating environments, horizontally as well as vertically, independent of piping and installation conditions. The meter is vacuum sealed to prevent humidity from reaching the electronics.

Water metering without waste

is what it is all about. flowIQ® 3100 has built-in leak surveillance. This means that both the utility and the consumer will quickly discover a possible leakage, and thus minimise water waste – for the benefit of the environment and the economy.

flowIQ® 3100
– the most cost-effective solution for cold water metering

The electronic ultrasonic water meter flowIQ® 3100

flowIQ® 3100 is a compact meter, which is based on ultrasonic technology. flowIQ® 3100 is a MID-classified meter in accuracy class 2 and type tested according to OIML R49. The meter is used for metering cold water with temperatures from 0.1 °C to 50 °C.

flowIQ® 3100 is sealed and verified, and the meter can and may only be opened at Kamstrup A/S. If the meter has been opened and the seals have been broken, the meter is no longer valid for billing purposes, and the factory guarantee no longer applies.

Accuracy and longevity

flowIQ® 3100 has been type tested according to OIML R49, which guarantees long-term stability as well as accuracy and reliable measurement. The meter has no moving parts and is thus resistant to impurities in the water, which secures longevity.

flowIQ® 3100 measures with an accuracy which is better than ± 2 %, and the flow meter's long-term stability and pinpoint accuracy are maintained even at flow sizes, which markedly exceed the nominal flow.

Flexible installation

The compact design makes it easy and fast to install flowIQ® 3100. The meter can be installed both horizontally and vertically independent of piping and installation conditions, in both new and existing installations. The specially designed large and mist-free display makes it easy to read the meter. In addition to volume reading, a graphic indication of current flow and a number of information codes are displayed.

Furthermore, flowIQ® 3100 is fitted with an optical eye which makes easy access to read consumption data, data logger and serial PC connection for configuration of the water meter.

Technical data

Size Q3	Connection	Length [mm]
4 m^3 h	G5/4B	260
6.3 m^3/h	G5/4B	260
10 m^3/h	G2B	300
16 m^3/h	DN50	270

High demands
require high standards

Ultrasound

Contrary to traditional cold water meters flowIQ® 3100 is not exposed to wear due to impure water. More than 20 years of experience has proved the ultrasonic principle the most reliable one in the long run. Two ultrasonic transducers are used to send sound signals both against and with the flow. The ultrasonic signal travelling with the flow reaches the opposite transducer first, and the time difference between the two signals can be converted into flow velocity and thereby also volume.

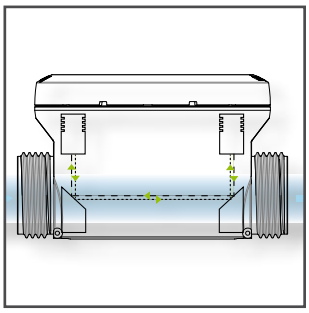

Vacuum sealing

flowIQ® 3100 is constructed as a vacuum chamber of moulded composite material, which is mounted on a flow part of brass or stainless steel. Thus, the electronics are fully protected against penetration of water, both from medium pipes and from the environment. The meter is specially suited for small pump stations and distribution wells as well as meter wells which are frequently filled with water. flowIQ® 3100 is also suited for consumption measurement in blocks of flats and commercial buildings. The meter fits perfectly into a network of MULTICAL® 21 household meters.

Remote reading

flowIQ® 3100 has built-in Wireless M-Bus for wireless data communication. Wireless M-Bus is one-way radio communication with open protocol. A Wireless M-Bus System consists of flowIQ® 3100 with Wireless M-Bus, a Wireless M-Bus Reader and a PC program for configuration and reading. Reading data are wirelessly and quickly exchanged between the Wireless M-Bus Reader and the PC-program, upon which data can be exported to a billing program.

Billing

Guarantee for accurate meter data is decisive when it comes to the consumer's reliance in consumption billing. It gives consumer satisfaction and secures revenues. The long-term stable and accurate ultrasonic water meter flowIQ® 3100 with Wireless M-Bus gives you optimum data security, and presents the consumer with a bill for the household's actual consumption and thereby a bill which the consumer trusts completely.

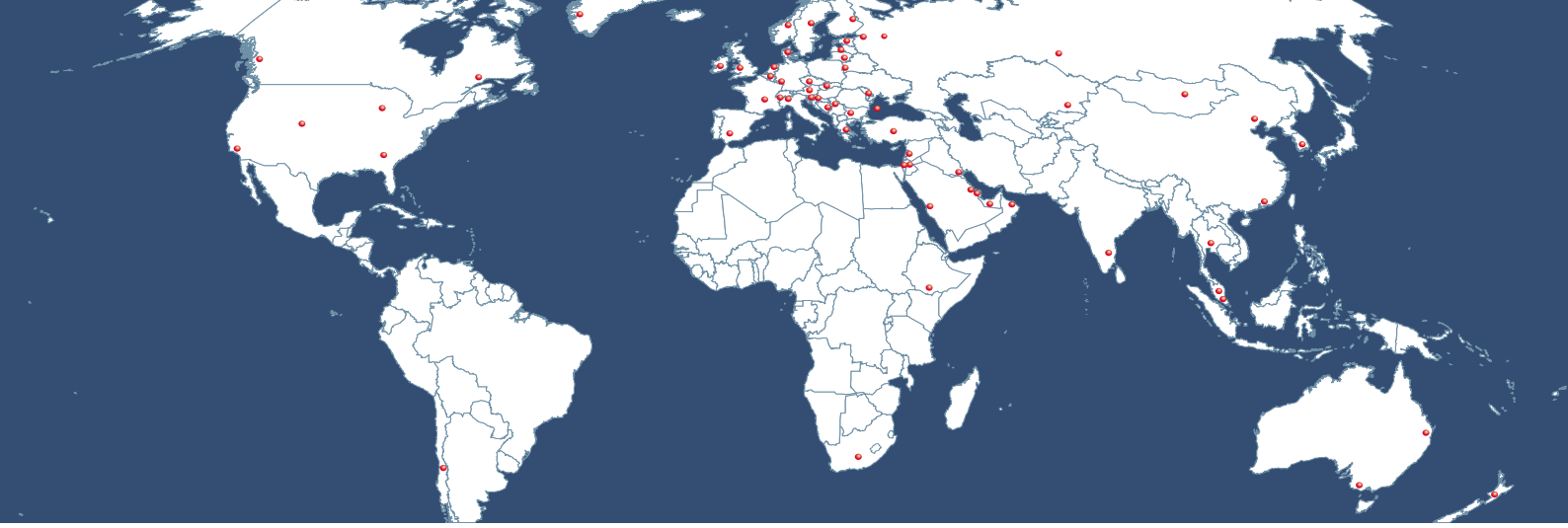

Our ultrasonic metering solution – your ultra strong partner

Kamstrup is the world's leading producer of system solutions for energy and water metering.

Our core areas are measurement of heat, cooling, water and electricity. Furthermore, in co-operation with you we develop AMR and service solutions that are customised for your company.

We are represented in more than 60 countries worldwide by Kamstrup sales and subsidiary offices or by our distributors.

All employees work hard to offer your company the very best service and to respond to global market information on water and energy measurement provided by our trusted partners.

In this way we maintain a strong mutual co-operation.

The Kamstrup brand

– when you demand quality, reliability, innovation and partnership.

58112370_C1_GB_07.2015

Kamstrup A/S
Industrivej 28, Stilling
DK-8660 Skanderborg
T: +45 89 93 10 00
F: +45 89 93 10 01
info@kamstrup.com
kamstrup.com

Think forward