ULTRASONIC WATER METER

QALCOSONIC W1

APPLICATION

Ultrasonic water meter QALCOSONIC W1 is designed for accurate measurement of cold and hot water consumption in households, apartment buildings and small commercial premises.

- Static method of water consumption measurement, no moving parts
- High accuracy calculation of water consumption
- Eliminates measuring deviations caused by sand, suspended particles or air pockets.
- Long-term measurement stability and reliability
- 9 digits, multi-line LCD. Total volume and instantaneous flow rate indication
- Sensitive and accurate in low flows, down to 1l/h
- IoT and AMR, NFC, LoRa technology ready

APPROVAL

- 2014/32/EU
- ACS (French Drinking Water Standard)

APPROVAL IN PROGRESS

- OIML R49 Compliant
- RoHS Directive Reach
- WRAS (UK)
- KTW (D)

TECHNICAL FEATURES

- Temperature class T30, T30/90, T90
- Nominal flow 1.6 / 2.5 / 4.0 m^3/h
- Wide measurement range Q3/Q1 = R 250/400/800 (optional)
- No straight sections required
- Installation in any position
- No measurement of air
- Environment class E1/M1
- Protection class IP68
- Nominal pressure PN16
- Metering archive registration
- Maintenance free device, battery lifetime > 16 years
- Bi-directional flow measurements
- Flow direction indication
- Meter parametrisation and archive reading via NFC or optical interface
- Durable composite body
- Measurement units: m^3-m^3/h. Gal-GPM. ft^3-ft^3/h (optional)
- Strainer and back flow valve (optional)

AMR READY (IN PROGRESS) OPTIONAL

- W-Mbus 868 (433)MHz. OMS T1; S1
- LoRa WAN
- SigFox
- NFC

PARAMETRISATION OF THE METER

- NFC and optical interface is integrated into the top front panel of calculator. It is designed for data reading via M-bus protocol and parameterisation of the meter

PULSE AND MBUS OUTPUT:

- Pulse and Mbus output option is available via optical interface by means of add clamp-on module

RADIO INTERFACE

- The internal radio provides data reading via WMBUS telegram: 868/433MHz. S1, T1 OMS mode, LoRa WAN, SigFox (optional)

DATA REGISTRATION

- Total volume
- Forward volume
- Reverse volume
- Maximum flow rate value and date
- Minimum flow rate value and date
- Operating time without an error
- Operating time
- Error code
- Temperature indication

DATA LOGGER – HISTORY VALUES

- Hourly, daily, monthly values of the measured parameters are stored in internal memory
- All data from archive can be read by means of the remote reading

LCD INDICATIONS AND ALARM

MULTIPLE SETTABLE ALARMS AND EVENTS INCLUDE:

- Flow direction indication
- Battery level indication
- Leakage
- Burst
- Backflow
- Empty pipe
- Radio communication
- Warning indication
- Temperature indication (special configuration)

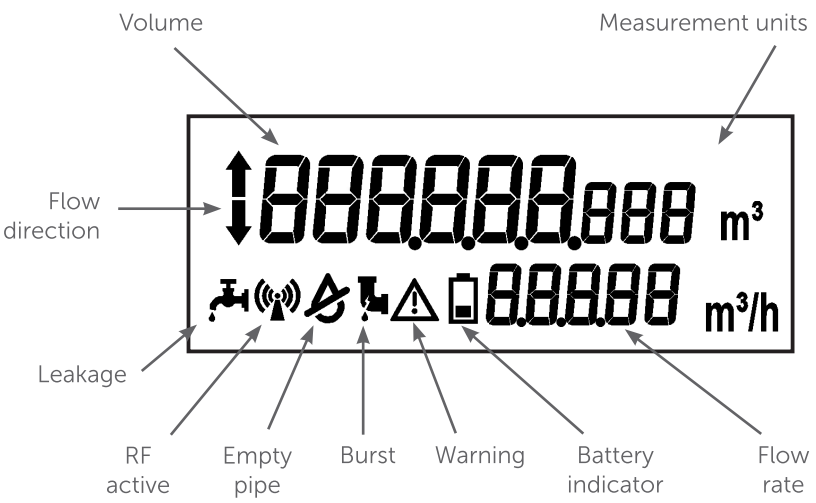

TECHNICAL DATA:

Flow rate sensor	Q3 [m3/h]	1.6 / 2.5 / 4.0
	R Q3 / Q1	Q3 1.6: 250 / 315 Q3 2.5: 250 / 400 Q3 4.0: 250 / 400 / 800
	Medium Temp. (operating temperature)	0,1 – 90 °C
	LCD Display	9-digits
Flow measurement	Protection class [IP]	IP68
	Ambient class	Class C / EN 14 154
	Ambient temperature	+5 °C...+65 °C
	Installation position	All installation positions (vertical, horizontal, rising pipe, down pipe)
	Nominal pressure [bar]	PN16 bar
	Pressure loss	0.25 / 0.40
	Battery lifetime	16 years
	Units	m^3/h - l/h - m^3, GAL - ft^3 - GPM - ft^3/h (optional)

TECHNICAL DATA:

Permanent Q_3, m³/h	R Q_3/Q_1	Maximum Q_4, m³/h	Minimum Q_1, m³/h	Transitional Q_2, m³/h	Starting flow m³/h	Connections	Overall length, mm	*ΔP*
1,6	R315	2	0,005	0,008	0,001	G3/4" (DN15)	80, 105, 110, 165, 170	*ΔP* 25
2,5	R400	3,125	0,0063	0,01	0,001	G3/4" (DN15)	80, 105, 110, 165, 170	*ΔP* 40
4	R400	5	0,001	0,016	0,002	G1" DN20	105, 110, 130, 190	*ΔP* 25
4	R800	5	0,005	0,008	0,002	G1" DN20	105, 110, 130, 190	*ΔP* 40

SIZE AND DIMENSIONS:

DN [mm]	15	20
L [mm]	80, 105, 110, 165, 170	105, 110, 130, 190
H [mm]	69,5	74,1
G	3/4"	1"

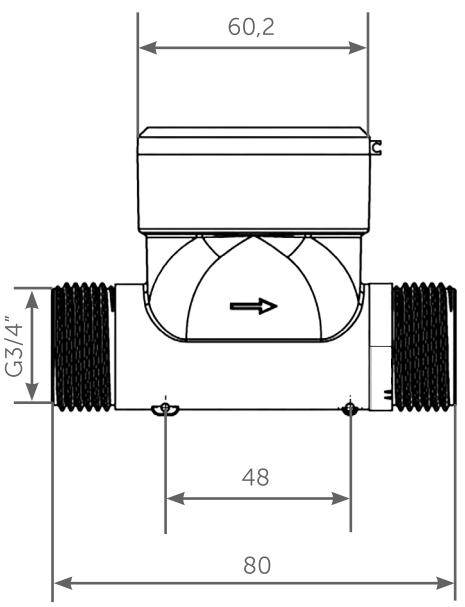

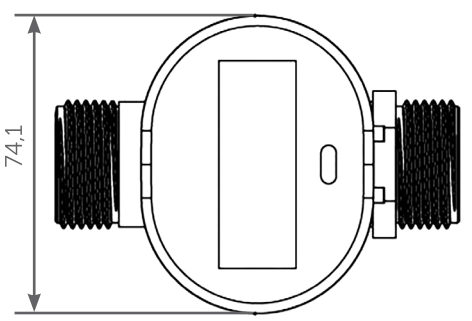

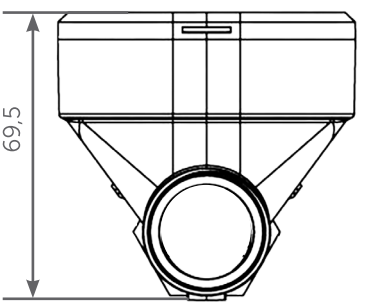

Stockshed Limited. Stoneycroft House, Mud Lane, Eversley. Hampshire. RG27 0QS
Tel: +44 (0)118 9734955 | Email: info@stockshed.com | Registered in England & Wales No. 08599755